USER'S GUIDE

Installation & Operation

Instructions

Electromagnetic Flow Meter

INDEX

1. Introduction

AFLO electromagnetic flowmeters offer reliable, precise and inexpensive flow measurement on all electrically conductive liquids. Typical applications are found in all industries. E.g.:

- Water sector: Potable water, treatment of chemicals, waste water and sludge.
- Food sector: Dairy products, beer, wine, soft-drinks and fruit juices.
- Chemical sector: Detergents, pharmaceuticals, acids and alkalies.
- Other sectors: District heating, paper pulp and mining slurries.

The flow measuring principle is based on Faraday's law of electromagnetic induction.

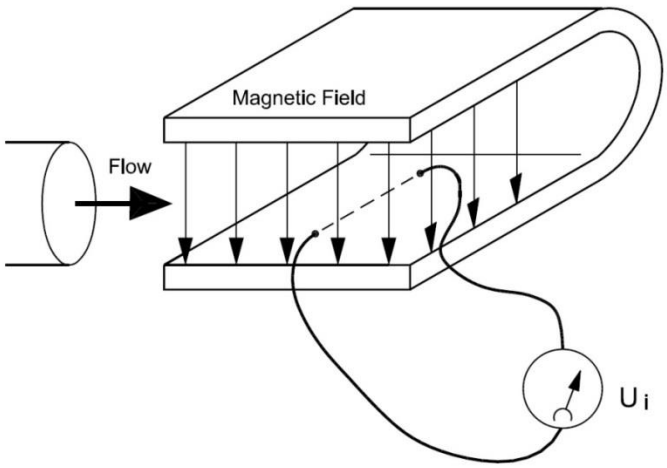

Figure (1)

U_i = When an electrical conductor of length L is moved at velocity v, perpendicular to the lines of flux through a magnetic field of strength B, the voltage U_i is induced at the ends of the conductor

Ui = L x B x v

Ui = Induced voltage

L = Conductor length = Inner pipe diameter = k1

B = Magnetic field strength = k2

v = Velocity of conductor (media)

k = k1 x k2

Ui = k x v, the electrode signal is directly proportional to the fluid velocity

1.1.SENSOR

The sensor converts the flow into an electrical voltage (U_i) proportional to the velocity of the flow. The sensor is built up of a stainless steel pipe, 2 coils, electrodes, an isolating liner, housing and where applicable, connecting flanges.

1.2.TRANSMITTER

The transmitter consists of a number of function blocks which convert the sensor voltage into flow readings.

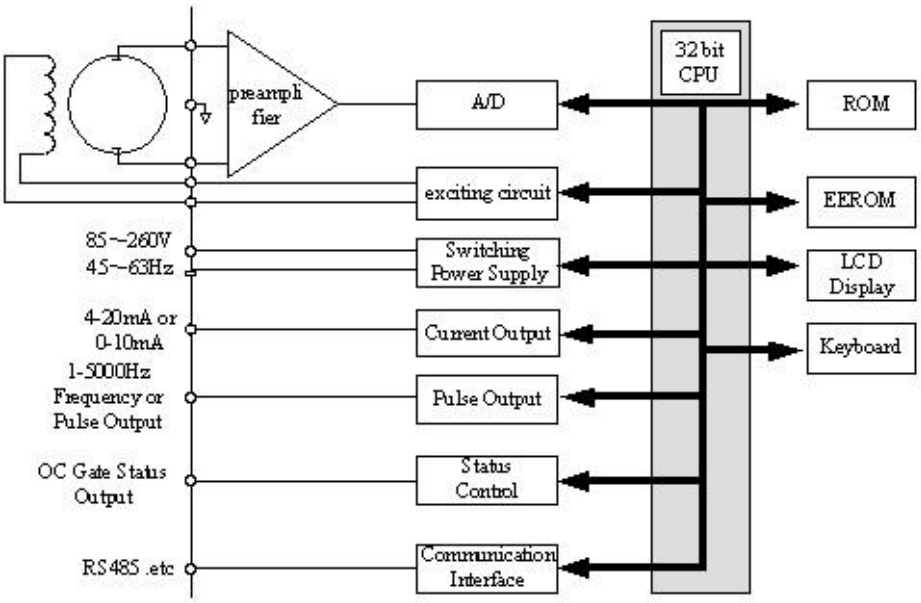

Figure (2)

2. Technical Specifications

Transmitter

Fluid conductivity	⩾ 5 μS / cm
Accuracy	±0.3% or ±0.5%
Keypad	4 control buttons
Ambient Temperature	-20…+60 ˚C
Output	0-10 mA, 4-20 mA, Frequency, Pulse
Communication	RS485 MODBUS
Display	3 Lines LCD
Power Supply	85…250 VAC 45…63Hz20W, 20…36 VDC or battery powered
Protection	IP67
Totalizer	Forward, reverse and net totalizer

Sensor

Nominal Size mm	DN10…DN3000
Nominal Pressure	PN6,10,16,25,40
Liner	Neoprene, PTFE, FEP, Hard Rubber, Polyurethane
Electrodes	AISI 316L St. St., Hastelloy, Titanium, Tantalum, Platinum-Iridium
Operating temperature	-20...+80 °C (hard rubber) -20...+120 °C (with Teflon and away from the transmitter installation)
Measuring Tube	Stainless steel
Body Material	Carbon Steel
Protection	IP 67 / IP 68 (for remote version)

3. Technical Drawings

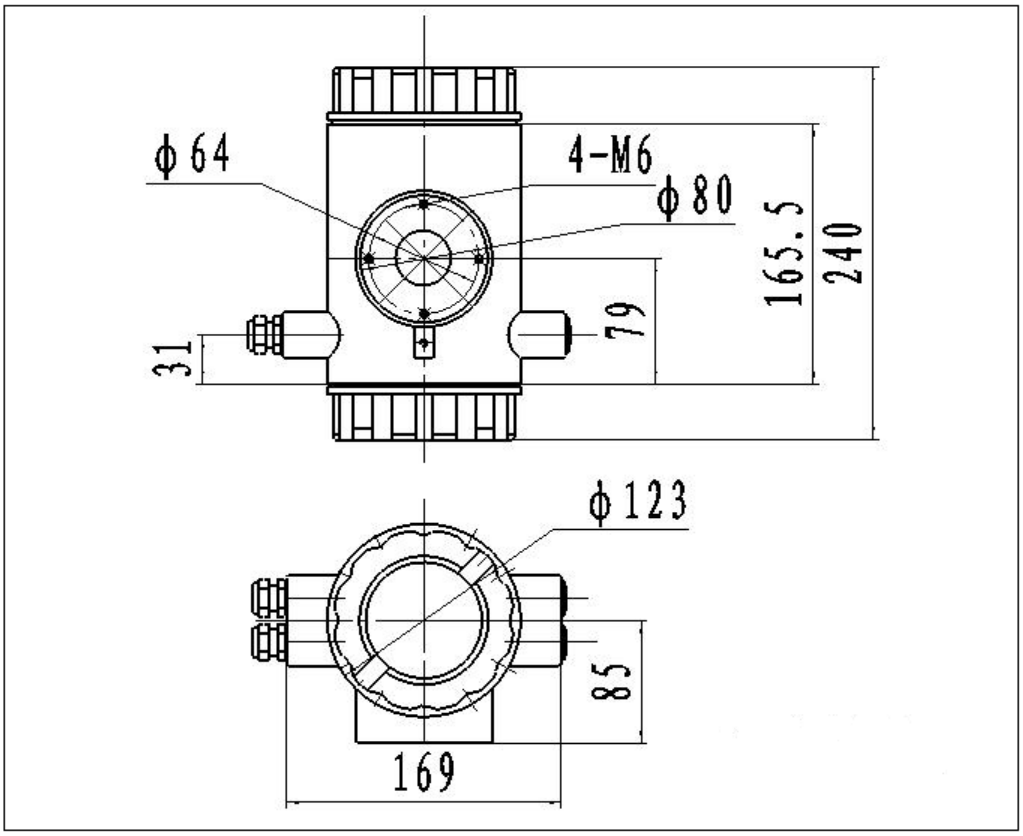

Figure (3)

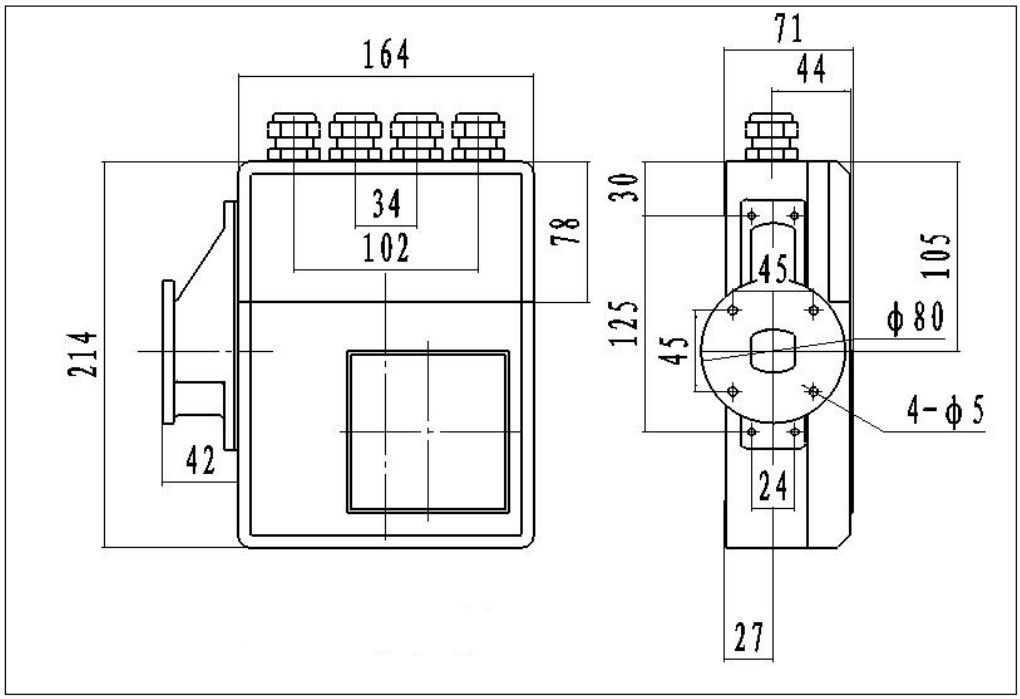

Figure (4)

Dimensions according to Nominal Pressure Value for Remote and Compact Type

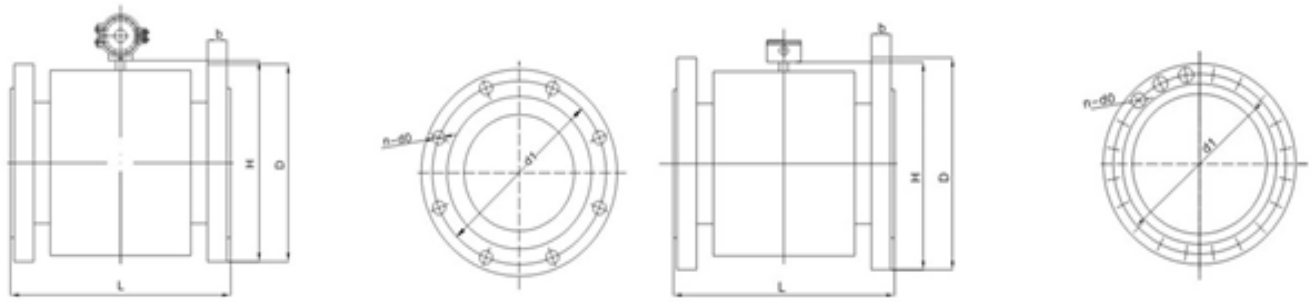

Figure (5)

DN	Dimensions(Pressure 1.6MPa)					Dimensions(Pressure 4.0MPa)					L	H	Weight Kg
	D	d1	d0	n	b	D	d1	d0	n	b			
15	95	65	14	4	16	95	65	14	4	16	200	160	13
20	105	75	14	4	18	105	75	14	4	18	200	167	13
25	115	85	14	4	18	115	85	14	4	18	200	169	13
32	140	100	18	4	18	140	100	18	4	18	200	185	13
40	150	110	18	4	20	150	110	18	4	20	200	193	15
50	165	125	18	4	20	165	125	18	4	20	200	206	16
65	185	145	18	4	20	185	145	18	4	22	250	224	20
80	200	160	18	8	22	200	160	18	8	22	250	241	22
100	220	180	18	8	22	235	190	22	8	26	250	263	25
125	250	210	18	8	22	270	220	26	8	26	250	295	33
150	285	240	22	8	24	300	250	26	8	28	300	325	36
DN	Pressure 1.6 Mpa					Pressure 1.0MPa							
200	340	295	22	12	26	340	295	22	8	24	350	383	46
250	405	355	26	12	28	395	350	22	12	26	450	440	65
300	460	410	26	12	32	445	400	22	12	28	500	498	75
350	520	470	26	16	35	505	460	22	16	30	500	553	100
400	580	525	30	16	38	565	515	26	16	32	500	608	160
450	640	585	30	20	42	615	565	26	20	35	550	665	170
500	715	650	33	20	46	670	620	26	20	38	550	727	210
600	840	770	36	20	52	780	725	30	20	42	600	840	240
DN	Pressure 1.0 MPa					Pressure 0.6MPa							
700	895	840	30	24	30	860	810	26	24	26	700	895	270
800	1015	950	33	24	32	975	920	30	24	26	800	1002	
900	1115	1050	33	28	34	1075	1020	30	24	26	900	1107	
1000	1230	1160	36	28	34	1175	1120	30	28	26	1000	1222	
1200						1405	1340	33	32	28	1200	1437	
1400						1630	1560	36	36	32	1400	1663	
1600						1830	1760	36	40	34	1600	1863	
1800						2045	1970	39	44	36	1800	2072	
2000						2265	2180	42	48	38	2000	2282	
2200						2475	2390	42	52	42	2200	2487	
2400						2685	2600	42	56	44	2400	2636	
2600						2905	2810	48	60	46	2600	2836	
2800						3115	3020	48	64	48	2800	3036	
3000						3315	3220	48	68	50	3000	3236	

4. Wiring

4.1.Compact type Terminal

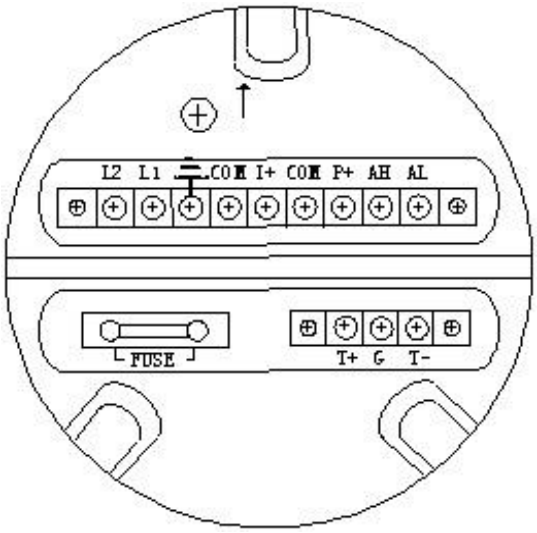

Figure (6)

I+:	Output Current for Flow Measurement	G:	RS232 Communication Ground
COM：	Output Current (Ground) for Flow Measurement	L1：	220V（24V）Power Supply
P+：	Frequency(Pulse) Output for Bi-directional Flow	L2：	220V（24V）Power Supply
COM：	Frequency (Pulse) Output (Ground)		
AL：	Alarm Output for Low Limit		
AH：	Alarm Output for Upper Limit		
COM：	Alarm Output (Ground)		
FUSE：	Fuse for Power Supply		
T＋：	+Communication Input Signal(RS485-A)		
T－：	-Communication Input Signal(RS485-B)		

Signal lines labels in compact type

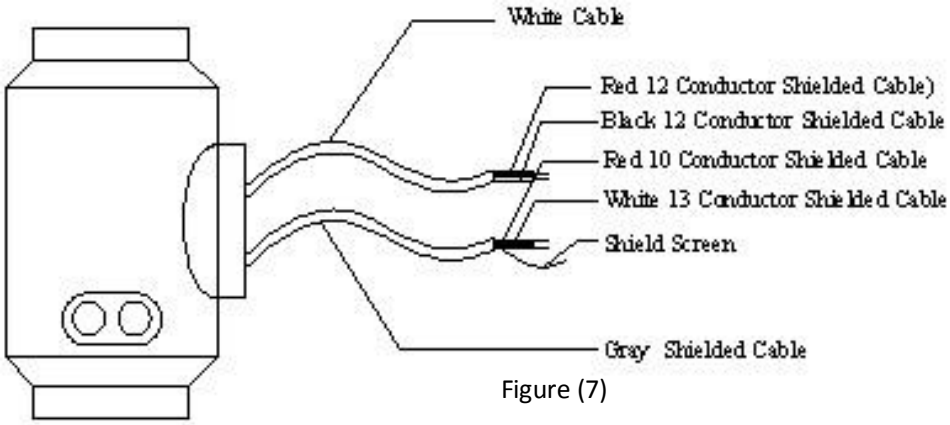

Figure (7)

White twisted-pair cable (for exciting current)

- 12 Conductors (Red)
- 12 Conductors (Black)

Grey shielded twisted-pair cable

- 10 Conductors (Red) connected to “Signals 1”
- 13 Conductors (White) connected to “Signals 2”
- Shielded Conductor connected to “Signal Ground”

4.2.Remote type Terminal

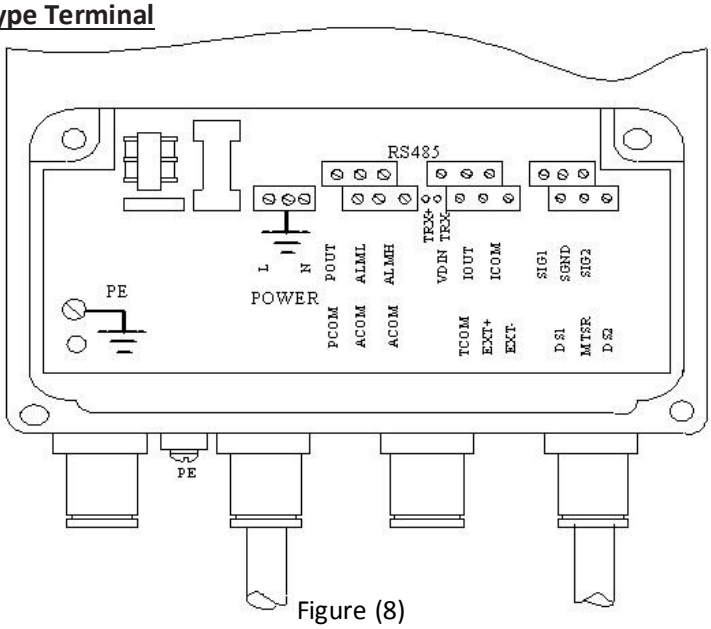

Figure (8)

SIG 1	Signal 1
SGND	Signal Ground
SIG 2	Signal 2
DS1	Shielded Exciting 1
DS2	Shielded Exciting 2
EXT+	Exciting Current+
EXT-	Exciting Current-

To Separate Model Sensor

VDIN	Current two lines 24V Spots
ICOUT	Analog Current Output
ICCOM	Analog Current Output Ground

Analog Current Output

POUT	Flow Frequency (Pulse) Output
PCOM	Frequency (Pulse) Output Ground

Frequency (Pulse) Output

ALMH	Upper Limit Alarm Output
ALML	Low Limit Alarm Output
ALCOM	Alarm Output Ground

Two Alarm Outputs

TRX+	Communication Input (RS485-A)
TRX-	Communication Input (RS485-B)
TCOM	232 Communication Ground

Communication Input

Output connection

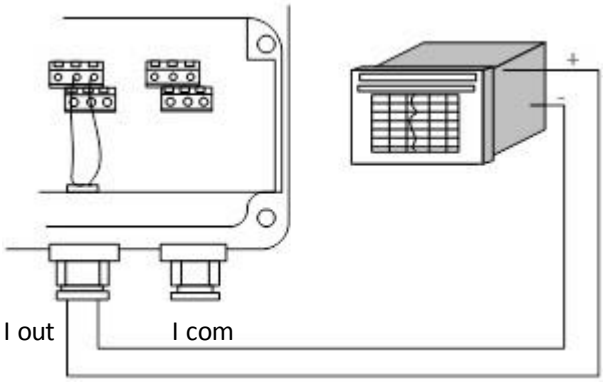

Figure (9) output current circuit

When DIP switch set to ON, AFLO Transmitter can provide +28V as a power supply and up-pull 10kΩ resistance to output Frequencies (PUL) to isolated OC gate, Alarm Output (ALMH.ALML), and Status Control （INSW）. Frequency output obtained from POUT and PCOM terminals when DIP switch set as ON

When inductive load is connected to converter, a diode should be used as shown in figure (10)

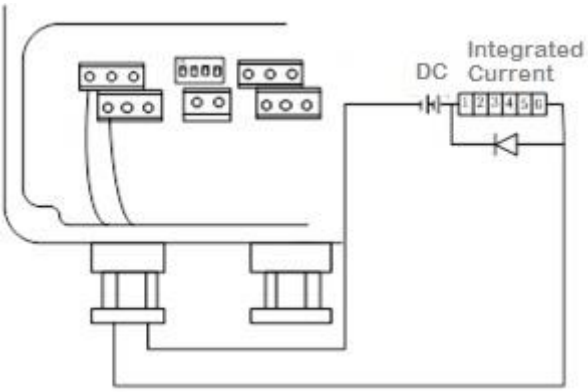

Figure (10) Connection of electro magnet counter

Electronic counter connection as shown in figure (11)

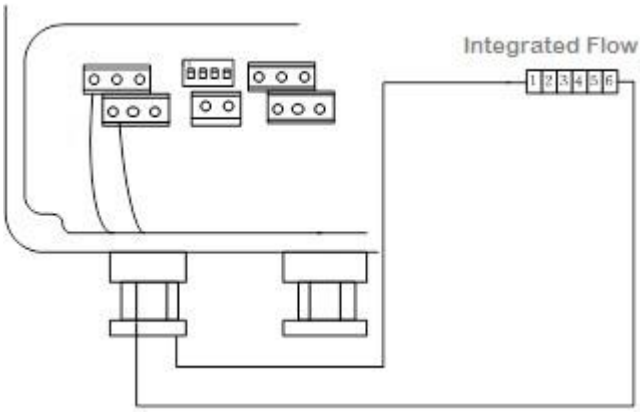

Figure (11)

Alarm output connection as shown in figure (12)

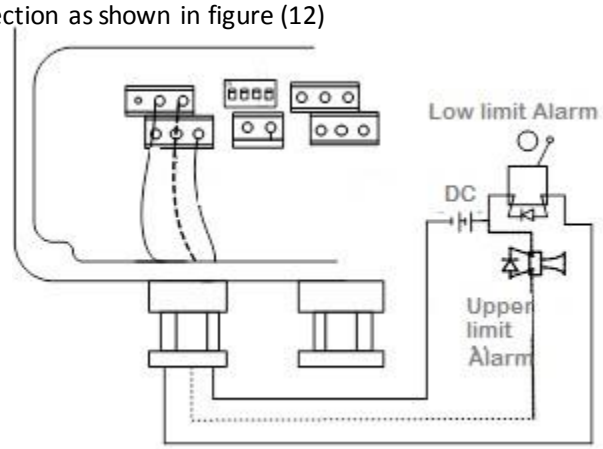

Figure (12)

OC gate connection as shown in figure (14)

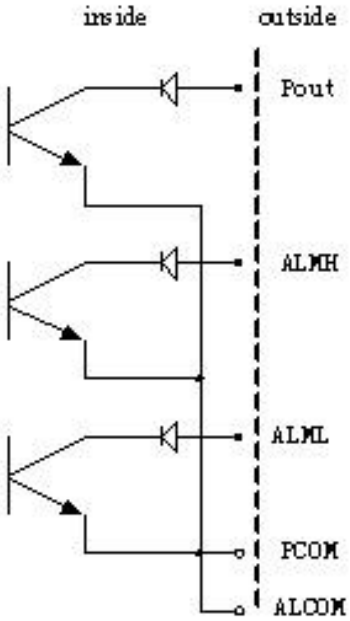

Figure (14)

ON/OFF Switch Diagram

Key 1 ON: Supply up power (24V) for ALML output.

OFF: No connection.

Key 2 ON: Pulse output to OC gate when flow verification was taken. Connect pull -up resistor.

OFF: No connection.

Key 3 ON: Supply up power (24V) for ALMH output.

OFF: No connection.

Key 4 ON: Connected to RS485 terminal resistor for communication

OFF: No connection.

Note Terminal used for far communication only.

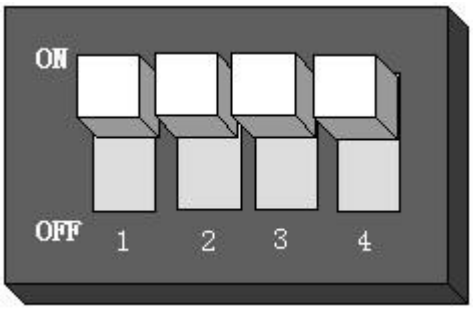

Figure (15)

5. Digital outputs

Digital output means frequency output and pulse output, and both of them use the same output point, so user can choose only one type of them not both

Digital voltage output connection as shown in figure (15)

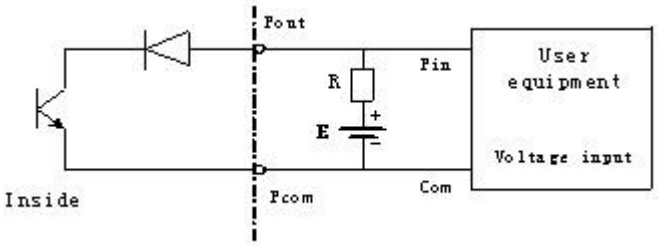

Figure (15)

Photoelectricity coupling (PLC etc.) connection as shown in figure (16)

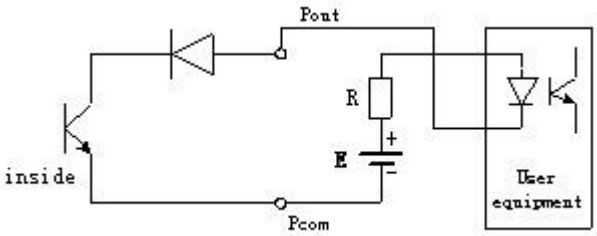

Figure (16)

Relay connection as shown in figure (17), mostly relays has a diode inside. If not, user should connect one externally.

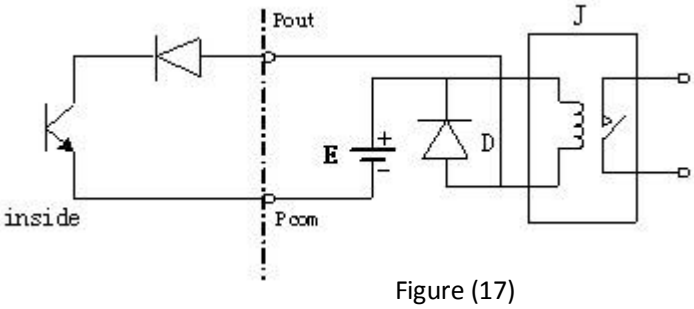

Figure (17)

6. Operating

6.1.Compact Transmitter Display

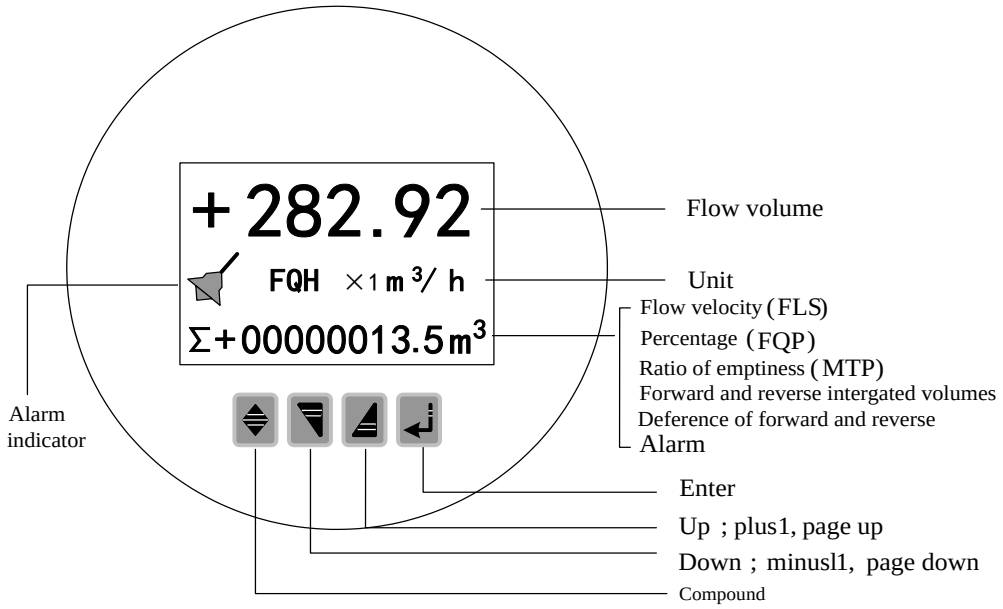

Figure (18)

6.2.Remote Transmitter Display

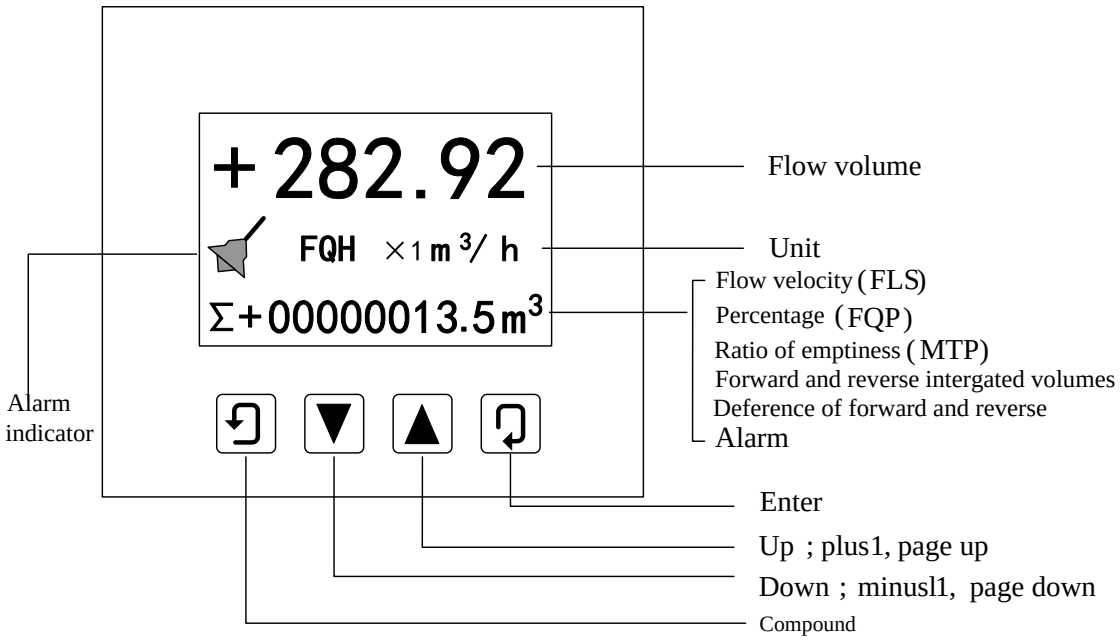

Figure (19)

6.3.Keys function

"Down" key: Selecting displayed data on lower line in turn

"Up" key: Selecting displayed data on higher line in turn

"Compound" key + "Enter" key: Come into parameter setting

"Enter" key: Press it to come into selected function

Adjust LCD contract using "Compound" key + "Up" key or "Compound" key + "Down" key for several seconds

"Compound" key + "Down" key: Cursor turns left

"Compound" key + "Up" key: Cursor turns right

"Enter" key: Press for two seconds under any state and will return to measuring, after 3 minutes It will return to the measuring automatically

6.4.Functions select menu

Push "Compound "+"Enter" keys for functions select, push "Up" or "Down" keys to select one of the following parameters.

Code	Functions	Notes
1	Parameters Set	Enter a password , and then adjust parameters settings.
2	Clr Total Rec	reset totalizer
3	Fact Modif Rec	Select this function, it can be check the factor's modify Record

6.5.Parameters Configuration

Code	Parameter words	Setting Way	Grades	Range
1	Language	Select	2	English
2	Comm Addres	Set count	2	0～99
3	Baud Rate	Select	2	300～38400
4	Snsr Size	Select	2	3～3000
5	Flow Unit	Select	2	L/h, L/m, L/s, m^3/h, m^3/m, m^3/s
6	Flow Range	Set count	2	0～99999
7	Flow Rspns	Select	2	1～50
8	Flow Direct	Select	2	Plus/ Reverse
9	Flow Zero	Set count	2	0～±9999
10	Flow Cutoff	Set count	2	0～599.99%
11	Cutoff Ena	Select	2	Enable/Disable
12	Total Unit	Select	2	0.001m^3～1m^3 、 0.001L～1L
13	SegmaN Ena	Select	2	Enable/Disable
14	Analog Type	Select	2	0～10mA /4～20mA
15	Pulse Type	Select	2	Freque / Pulse

16	Pulse Fact	Select	2	0.001m^3～1m^3 , 0.001L～1L
17	Freque Max	Select	2	1～ 5999 HZ
18	Mtsnsr Ena	Select	2	Enable/Disable
19	Mtsnsr Trip	Set count	2	59999 %
20	Alm Hi Ena	Select	2	Enable/Disable
21	Alm Hi Val	Set count	2	000.0～ 599.99 %
22	Alm Lo Ena	Select	2	Enable/Disable
23	Alm Lo Val	Set count	2	000.0～599.99 %
24	Sys Alm Ena	Select	2	Enable/Disable
25	Clr Sum Key	Set count	3	0～99999
26	Snsr Code1	User set	4	Finished Y M
27	Snsr Code2	User set	4	Product number
28	Field Type	Select	4	Type1,2,3
29	Sensor Fact	Set count	4	0.0000～5.9999
30	Line CRC Ena	Select	2	Enable/Disable
31	Lineary CRC1	User set	4	Set Velocity
32	Lineary Fact 1	User set	4	0.0000～1.9999
33	Lineary CRC2	User set	4	Set Velocity
34	Lineary Fact 2	User set	4	0.0000～1.9999
35	Lineary CRC3	User set	4	Set Velocity
36	Lineary Fact 3	User set	4	0.0000～1.9999
37	Lineary CRC4	User set	4	Set Velocity
38	Lineary Fact4	User set	4	0.0000～1.9999
39	FwdTotal Lo	Correctable	5	00000～99999
40	FwdTotal Hi	Correctable	5	00000～9999
41	RevTotal Lo	Correctable	5	00000～99999
42	RevTotal Hi	Correctable	5	00000～9999
43	PlsntLmtEna	Select	3	Enable/Disable
44	PlsntLmtVal	Select	3	0.010～0.800m/s
45	Plsnt Delay	Select	3	400～2500ms
46	Pass Word 1	User re-set	5	00000～99999
47	Pass Word 2	User re-set	5	00000～99999
48	Pass Word 3	User re-set	5	00000～99999
49	Pass Word 4	User re-set	5	00000～99999
50	Analog Zero	Set count	5	0.0000～1.9999
51	Anlg Range	Set count	5	0.0000～3.9999
52	Meter Fact	Set count	5	0.0000～5.9999
53	MeterCode 1	Factory set	6	Finished Y /M
54	MeterCode 2	Factory set	6	Product Serial No

6.5.1.Passwords

Grade 1 of password (set by manufacturer as 00521): users can only read parameter.

Grade 2 of password (set by manufacturer as 03210): users can change 1~24 parameters.

Grade 3 of password (set by manufacturer as 06108): users can change 1~25parameters.

Grade 4 of password (set by manufacturer as 07206): users can change 1~38parameters.

Grade 5 of password (Fixed): users can change 1~52 parameters.

Password Grade 5 can be set by skilled users. Grade 4 is mainly used for resetting total volume in password. Grades 1~3 can be set by anyone who can be chosen by users.

6.5.2.Details Parameters

1- **Language**

There are 2 languages for AFLO transmitter. They can be set by users.

2- **Comm Addres**

It means this instrument's address when communicates with many, and has 01~99, holding the 0.

3- **Baud Rate**

300, 1200, 2400, 4800, 9600, 38400, baud rate.

4- **Snsr Size**

AFLO transmitters can be equipped with some different sensors that have deferent diameter of measuring pipes. The pipes in different diameters from 10mm to 3000mm can be chosen in relative table.

5- **Flow unit**

The flow unit can choose form the parameters (L/s, L/m, L/h, m^3/s, m^3/m, m^3/h), user can choose the proper unit according to the technological requirement and using habit.

6- **Flow Range**

Flow range means upper limit value, and lower limit value is set "0" automatically. So, it makes the range, and makes the relation of percent display, frequency output and current output with flow:

Percent display = (flow measure / measure range) x 100 %;

Frequency output = (flow measure / measure range) x frequency full;

Current output = (flow measure / measure range) x current full + base point;

Pulse output will not affect.

7- **Flow Rspns**

It means time of filter measure value. The long one can enhance the stability of flow display and output digital, and fits for gross add up of pulse flow; the short one means fast respond rate, and fits for production control. It is set by select.

8- **Flow Direct**

If users think the direct and design are different, just change the direct parameter is OK, but not change exciting or signal.

9- **Flow zero**

Make sure the sensor is full of fluid, and the fluid is stable. Flow zero is shown as velocity of flow, mm/s.

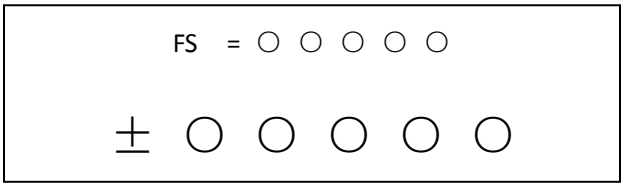

Figure (20)

Converter's zero-flow correction displays like this:

Upper small words: FS means measure value of zero;

Lower large words: correction value of zero.

When FS is not "0", make FS = 0. Note: if change the value on next line and FS increases, please change the "+, -" to correct FS to zero.

Flow zero is the compound value of the sensor, and should be recorded in sensor list and band. The unit will be mm/s, and the sign will be opposite with correction value.

10- **Flow cutoff**

Flow cutoff is set in percentage of Upper Limit Range of flow, and users can delete all Negligible Small Signals of flow volume, velocity and percentage out of displaying and outputting them. Sometimes user can delete output of current output signal and frequency (pulse) output signal only to have flow, velocity and percentage being displayed.

11- **Total Unit**

Converter display is counter with 9 bits, and the max is 999999999.

Integrator units are L, m3 (liter, stere,).

Flow integrator value: 0.001L, 0.010L, 0.100L, 1.000L, 0.001m^3, 0.010m^3, 0.100m^3, 1.000m^3 ;

12- **SegmaN Ena**

When "SegmaN Ena" is "enable", if the flow flows, the sensor will export pulse and current。 When it is "disable", the sensor will export pulse as "0" and current as "0" (4mA or 0mA) for the flow flows reversals.

13- **Output currents**

Output current types can be chosen by users as 1~10mA or 4~20mA practically.

14- **Pulse Type**

Two kinds of Pulse Outputs can be chosen: Frequency Output and Pulse Output. Frequency Output is continuous square waveform and Pulse output is a serial wave of square wave. Frequency output is mainly used for instant flow and total integrated flow in short time measurement. Frequency output can be chosen in equivalent frequency unit and volume of integrated flow can be displayed. Frequency Output can be used in long time measurement for total integrated flow with volume units.

Frequency output and pulse output are usually from OC gates so that DC power supplies and load resistors have to be required.

Equivalent pulse Unit is referred to one pulse for value of flow. The range of pulse equivalent can be chosen:

Pulse Equivalent	Flow	Pulse Equivalent	Flow
1	0.001L/cp	5	0.001m3/cp
2	0.01L/cp	6	0.01m3/cp
3	0.1L/cp	7	0.1m3/cp
4	1.0L/cp	8	1.0m3/cp

Under the same flow, the smaller pulse, the higher frequency output, and the smaller error will be. The highest pulse output is 100cp/s.

15- **Freque Max**

Frequency output range is as the upper limit of flow measure, just the percent flow 100%. Frequency output upper limit can be selected between 1～5000Hz.

16- **Mtsnsr Ena**

The state of empty pipe can be detected with the function of converter. In the case of Empty Pipe Alarm, if the pipe was empty, the signals of analog output and digital output would be zero and displayed flow would be zero, too.

17- **Mtsnsr Trip**

When the pipe is full of liquid (whether flowing or not), the parameter of “Mtsnsr” could be modified more easily. The parameter displayed upper line is real MTP, and the parameter displayed bellow is the “Mtsnsr trip” that should be set. When setting “Mtsnsr trip”, you could be according to the real MTP, the value that should be set is usually three to five times of real MTP.

18- **Alm Hi Ena**

Users can choose “Enable” or “Disable”.

19- **Alm Hi Val**

The parameter of upper limit alarm is percentage of flow range and can be set in the way of setting one numerical value between 0%~199.9%.When the value of flow percentage is larger than the value of setting value, transmitter outputs the alarm signal.

20- **Alm Lo Val**

The same as upper limit alarm.

21- **Sys Alm Ena**

Selecting Enable will have the function, and selecting Disable will cancel the function.

22- **Clr Sum Key**

User use more than 3 byte code to enter ,Then set this password in Clr Total Rec.

23- **Snsr Code**

It is referred to the produced date of sensor and the serial number of product that can keep the sensors coefficient right and accurate.

24- **Sensor Fact**

“Sensor Coefficient” is printed on the Label of the sensor when it is made in factory. The “sensor coefficient” has to be set into Sensor Coefficient Parameter when it runs with converter.

25- **Field Type**

AFLO affords three exciting frequency types: 1/16 frequency (type 1), 1/20frequency (type 2), 1/25 frequency (type 3). The small-bore one should use 1/16 frequency, and large-bore one should use 1/20 or 1/25 frequency. When using, please select type 1 first, if the zero of velocity is too high, select the type 2 or type 3.

Note: Demarcate on which exciting type, working on it only.

26- **FwdTotal Lo、hi**

Positive total volume high byte and low byte can change forth coming and reverse total value, and be used to maintenance and instead.

User use 5 byte code to enter, and can modify the positive accumulating volume (∑+). Usually, it is unsuitable to exceed the maximum the counter set（999999999）.

27- **RevTotal Lo、hi**

User use 5 byte code to enter, and can modify the negative accumulating volume (∑-). Usually, it is unsuitable to exceed the minimum the counter set（999999999）.

28- **PlsntLmtEn**

For paper pulp, slurry and other serosity, the flow measure will have "cuspidal disturb", because the solid grain friction or concussion the measure electrode. AFLO transmitters use variation restrain arithmetic to conquer the disturbing by designing three parameters to select disturb character.

Set it "enable", start variation restrain arithmetic; set it "disable", close variation restrain arithmetic.

29- **PlsntLmtVl**

This coefficient can disturb the variation of cuspidal disturb, and calculate as percent of flow velocity, thus ten grades: 0.010m/s, 0.020m/s, 0030m/s, 0.050m/s, 0.080m/s, 0.100m/s, 0.200m/s, 0.300m/s, 0.500m/s, 0.800m/s, and the smaller percent, the higher delicacy of cuspidal restrain.

Note: when using it, must test for select by the fact, and sometimes it is not the higher delicacy is good.

30- **PlsntDelay**

This coefficient can select the width of time of restrain cuspidal disturb and the unit is ms. If the duration is shorter than flow change in some time, AFLO will think it is cuspidal disturb, and if it is longer, AFLO will think it is natural. It also needs to select parameter in fact.

31- **User's password 1~4**

Users can use 5 grades of passwords to correct these passwords.

32- **Analog Zero**

When the converters are made in the factory, output current has been calibrated to zero scale, that is, accurate 0mA or 4mA output.

33- **Anlg Range**

When the converters is made in the factory, output current have been calibrated to full scale, that is, accurate 10mA or 20mA output.

34- **Meter Fact**

This fact is the special one of sensor-made-factory and the factory use this fact to unite

AFLO electromagnetic flow meters transmitters to make sure all the instruments can interchange by 0.1%.

35- **MeterCode 1 and 2**

Transmitter code records the date of manufacturing and serial number of converter.

6.6. Alarm information

Without trouble of power and hardware circuit, the normal trouble can be alarmed correctly.

This information displays on the left side of the LCD, the trouble is like this:

FQH ---- Flow high limit alarm; FQL ---- Flow low limit alarm;

FGP ---- Flow empty pipe alarm; SYS ---- System exciting alarm.

UPPER ALARM ---- Flow high limit alarm.

LOWER ALARM ---- Flow empty pipe alarm.

LIQUID ALARM ---- Flow empty pipe alarm.

SYSTEM ALARM ---- System exciting alarm.

7. Troubleshooting

7.1. No display

a) Check the power supply connection

b) Check the power fuse to see for OK

c) Check the contrast of LCD and regulate it to working state

7.2. Exciting alarm

a) Check if the exciting cables EX1 and EX2 did not connected

b) Check if the total resistance of sensor's exciting coil resistances less than 150Ω

c) If a) and b) are OK, the converter is failed

7.3. Empty pipe alarm

If sensor is full of measured fluid, When shorting circuit three connectors SIG 1, SIG 2, SGND of converter, and no "Empty Alarm" displayed then the converter works fine. In this case, it is possible that conductivity of measured fluid may be small or empty threshold of empty pipe and range of empty pipe are set wrongly.

Check the signal cable, and check the electro-poles.

Stop the flow rate, then the displayed conductivity should be less than 100%.

Resistances of SIG1 to SGND and SIG2 to SGND are less than 50kΩ (conductivity of water) during measurement operation.

DC voltage should be less than 1V between DS1 and DS2. If DC voltage is larger than 1V, the electro poles of sensor were polluted that have to be cleaned.

8. MOUNTING CONDITIONS

CAUTION

Sensor should always be full with fluid.

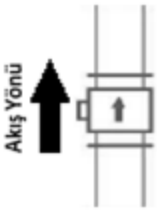

The direction of flow in vertical pipes must be upward.

In case of sensor nominal size is less than pipe size reduction should be done with 8° angle.

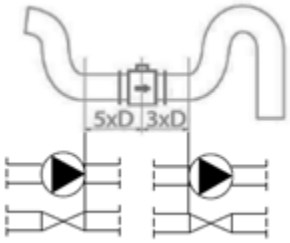

Straight pipe length should be at least 5x pipe DI after elbows, pumps and valves in upstream side and in downstream side 3xpipe DI before.

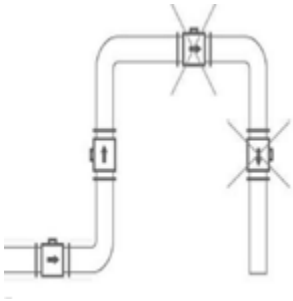

Bubbles and distortion avoidance.

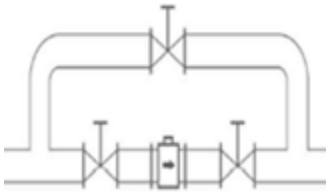

Easy to maintenance and clean-up by bypass line.

9. SHIPPING AND STORAGE CONDITIONS

Keep the product in its original packaging to avoid damage to the product installation. Product should be kept in storage in the following conditions.

- Protect from rain and humidity
- Protect from high vibration and shock
- Ambient temperature: -20…+60 ^{o}C
- Humidity must be less than 80%

NOTE:

Because of AKTEK's policy of improving their products, the AFLO, would be revised and improved. Please inform us about misunderstandings or errors which you may find in this manual comparing it to the device you bought. Do not hesitate to contact us to suggest how to improve our devices.

Thank You

İMES sanayi sitesi B Blok 204. Sk. No:40
Y.Dudullu Ümraniye - İstanbul
Tel:0216 540 7300 Faks: 0216 540 7303
www.aktek.com.tr info@aktek.com.tr