Aktek
Endüstriyel Ekipman ve Enstrümantasyon Ltd.Şti.

ULTRASONIC TRANSIT TIME FLOW METER

TFM2100-NG

INSTRUCTION MANUAL

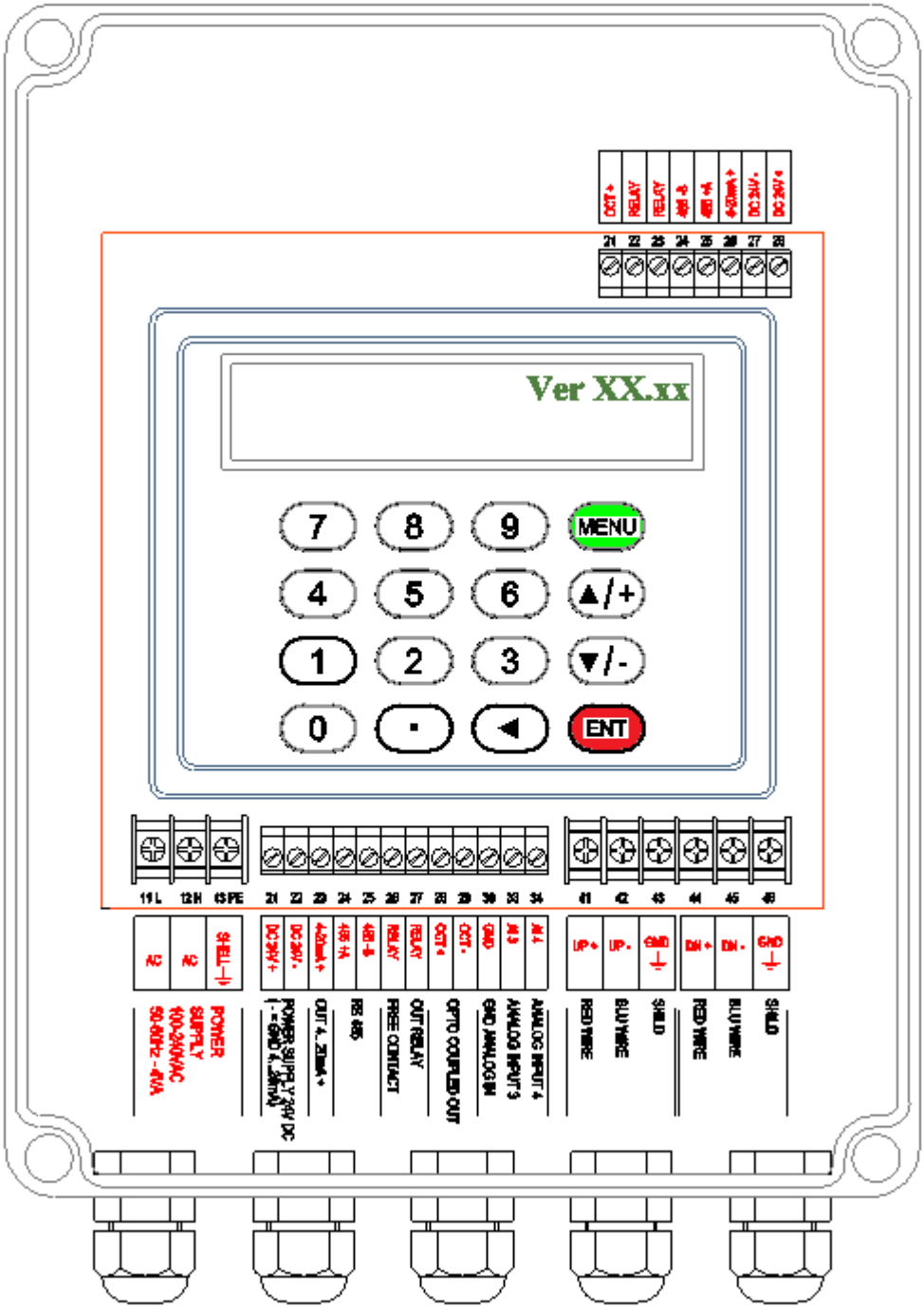
Ver XX.xx
MENU
ENT
7
8
9
4
5
6
1
2
3
0
▲/+
▼/-
19 L
20 N
18 PE
21
22
23
24
25
26
27
28
29
30
33
34
41
42
43
44
45
46
AC
AC
SHELL
DC24V+
DC24V-
4-20mA+
485 A
485 B
RELAY
RELAY
OUT+
OUT-
GND
IN 3
IN 4
UP+
UP-
GND
DN+
DN-
GND
POWER SUPPLY
100-240VAC
50-60Hz - 4VA
POWER SUPPLY 24V DC
(- = GND 4...20mA)
OUT 4...20mA +
RS 485
FREE CONTACT
OUT RELAY
OPTO COUPLED OUT
GND ANALOG IN
ANALOG INPUT 3
ANALOG INPUT 4
RED WIRE
BLU WIRE
SHILD
RED WIRE
BLU WIRE
SHILD

INTRODUCTION

Thanks for buying an Ultrasonic Transit Time Flow meter TFM2100-NG series.

The device measures flow rate by calculating the spreading time of an ultrasonic wave in a liquid, going upstream and downstream into a pipe. This flow meter is mostly used to measure the flow rate of homogeneous fluids, with a very little percentage of suspended solids and possibly without gas bubbles.

Its peculiar installation makes these devices suitable for measuring aggressive fluids (acids, basic and dissolvent) or very soiling fluids (oil and fuels).

The measuring system is composed of a couple of ultrasonic transducers acoustically coupled to the external pipe's wall (it is also possible to use transducers in direct contact with fluid to be measured) and a HOST unit elaborating the sent and received signals from the transducers. The HOST unit has a DSP microprocessor; it gives signals to interfacing with the process or the control systems.

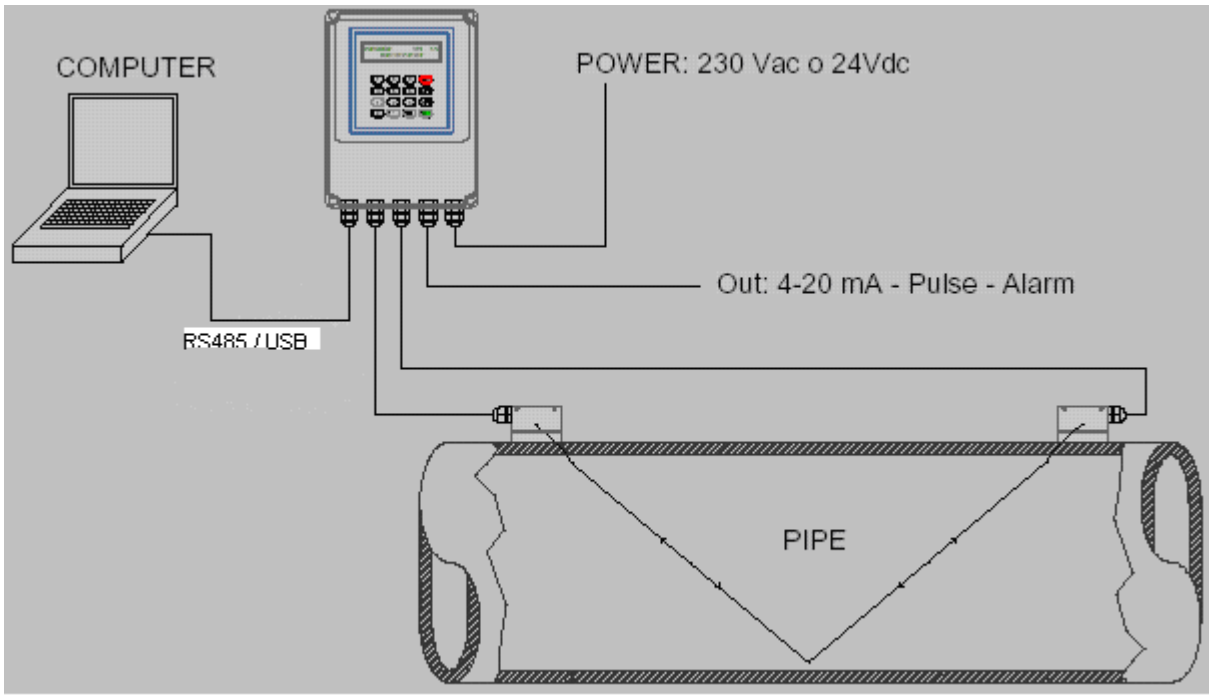

The devices main features are:

- Clamp-on sensors: it is not necessary to stop the flow to install them. Or Insertion sensors.
- AC and DC supply: 230 VAC and 24 VDC.
- The time difference during the measuring process could be 0.2 ns.
- Analog (4-20 ma), pulses (relays), frequency (OCT) and RS232 outputs.
- All the measures could be driven to the RS485 in order to save data into a PC or a serial printer.

1 WORKING PRINCIPLE

When the ultrasonic wave spreads in a liquid, the flow will cause a changing in the spreading time depending on downstream or upstream current.

The ultrasonic wave going towards the same directions of the flow increases the spreading speed, while the ultrasonic wave going towards the opposite side of the flow decreases the spreading speed.

If the difference between the two spreading times is accurately measured, it would be possible to calculate the flow speed (see the following picture).

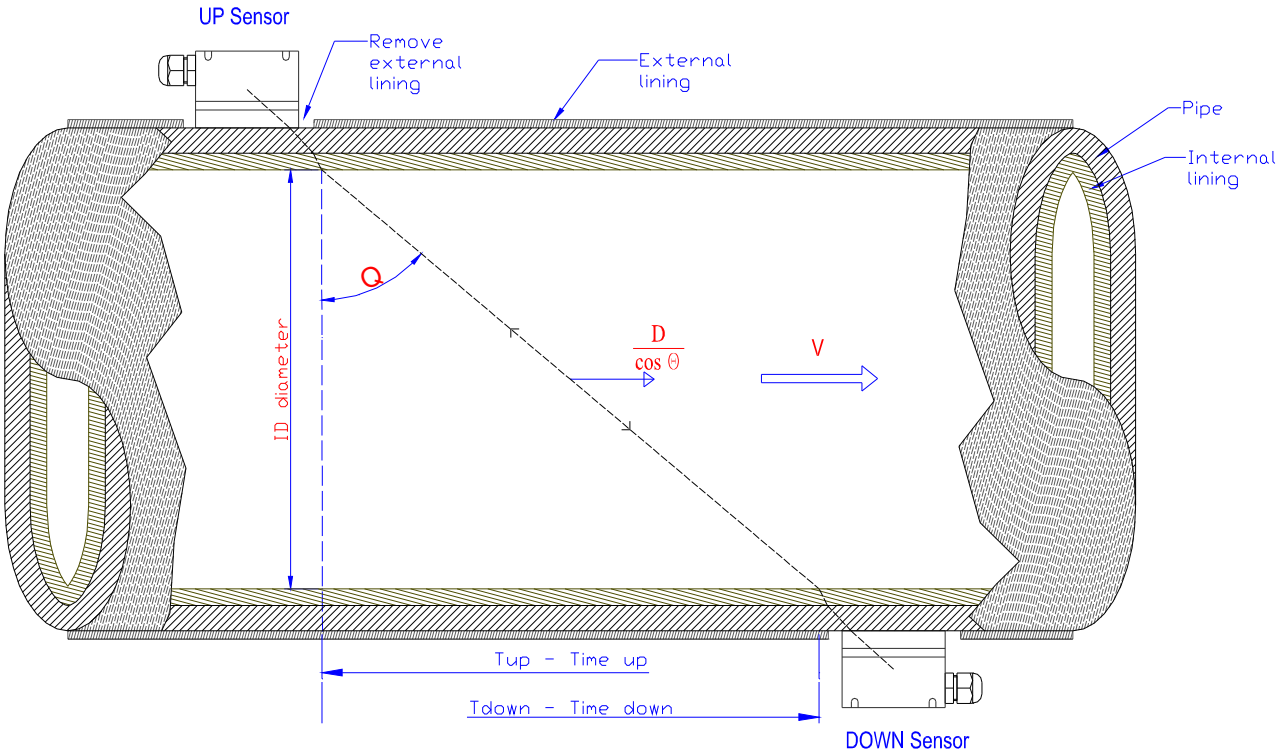

The measures are taken by 2 sensors in direct contact with the pipe's external surface.

One sensor is placed on the upper side of the pipe's external surface, one sensor is placed on the lower side of the pipe's external surface.

The sensors positions could look like a "Z" or like a "V" or a "W", if the pipe has a small diameter (in the previous sketch, the sensors are "Z" mounted).

The sensors are alternatively used to receive the ultrasonic pulses sent through the way pipe - fluid - pipe.

The difference between the transmitted and received signals upstream and downstream is calculated as follows:

(1) (2) (3)

$$Tup = \frac{\frac{M * D}{COS\Theta}}{Co + VSIN\Theta} \qquad Tdown = \frac{\frac{M * D}{COS\Theta}}{Co - VSIN\Theta} \qquad V = \frac{M * D}{SIN2\Theta} * \frac{\Delta T}{Tup * Tdown}$$

Typical timing signal

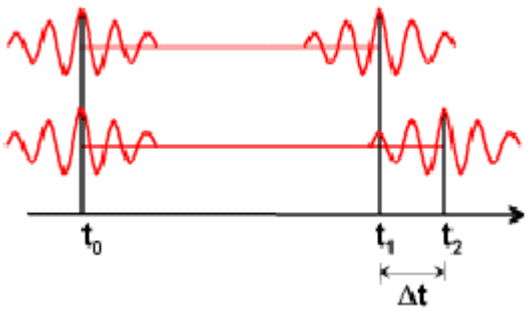

T_1 Downstream time

T_2 Upstream time

$\Delta T = T_2 - T_1$

Where:

M	Spreading time
D	Pipe's internal diameter
Θ	Transmission angle
Co	Sound spread speed through the fluid in static conditions
Tup	Positive spreading time
Tdown	Negative spreading time
V	Flow Velocity

The ΔT value is the difference of the spreading time into a homogenous fluid without gas bubbles.

The equation (3) for calculating the average speed "V" could be used for all the types of fluids in ideal conditions. The fluid speed measuring is in fact conditioned by different factors which make the precision decrease: for example the dumps on the pipe are internal walls: they change the measuring principle of the transit time flow meter.

TTFM100 series has are a lot of solutions trying to solve these problems, compensating the temperature influence, the dumped internal walls and the asymmetry in the speed distribution, in order to measure in critical conditions too.

It is possible to adjust the zero point of the device: if the fluid is in static conditions, this operation makes the repeatability precision increase until reaching values near to 0.5%.

1.1 TYPICAL USE

- Water treatment, slurry and process water pumping;
- Oil and chemical industries;
- Hydro-electric, cooling, anti-fire stations;
- Extraction industries;
- Food, paper and pharmaceutical industries;
- Car industries;
- Flow balancing;
- Heat measuring in central systems.

1.2 PACKING LIST

- Ultrasonic Transit Time Flow meter (fixed or portable) 1pcs
- ***Standard Clamp-on sensors TS-2*** ***2pcs***
- ***Standard Clamp-on sensors TM-1*** ***2pcs***
- ***Standard Clamp-on sensors TL-1*** ***2pcs***
- Acoustic coupling 1pcs
- Sensors mounting kit (optional) 1pcs
- Quality certification 1pcs
- Instruction Manual 1pcs

* **DEPENDING FROM THE TYPE OF SENSORS ORDERED BY THE CUSTOMER.**

1.1 TECHNICAL FEATURES

ITEM		PERFORMANCE
PIPE	Material	Steel, Stainless Steel, cast iron, plastic, with smooth walls, with rough walls, with very thin walls.
	Internal Diameter	20 ~ 6000 mm.
	Pipe length	Upstream: bigger than 10D and 50D far from the pump, downstream: bigger than 5D.
FLUID	Type	Potable water, sea water, other liquids with few suspended solids.
	Turbidity	Smaller than 10000ppm (mg/l) with a few air bubbles.
	Temperature	-20°C ~ +80°C, without ice at low temperatures.

SPEED	Speed	-16 m/s ~ +16 m/s
SENSORS	Type	0. Standard – TS-2 DN15…..DN100 mm 1. Standard – TM-1 DN50…..DN1000 mm 2. Standard – TL-1 DN300…DN6000 mm 3. Insertion type B > 50 mm < 2000 mm for under charge applications. Min. temp. -40°C, max temp. 160°C, max pressure 60 bars. 4. Sensors pre-mounted between flanges F type from DN50 to DN1000, PN16 until DN400, PN10 until DN1000, min. temp. -40°C, max. Temp. 160°C.
	Cable lengths	Min. 5 m, max. 500 m.
SENSORS	Mounting methods	"V" Method: for pipes with small diameter, until DN400 mm. "Z" Method: for pipes with big diameters, bigger than DN250. "W" or "N" Method: suitable for very small pipes, DN15….100.
FLOWMETER	Display	Alphanumeric 2 x 20 digits LCD back lighted.
	Keypad	4 x 4
	Mounting	Wall mounting.
	Input	Current loop 4 - 20 mA, 0.1% accuracy.
	Outputs	Selection 4 - 20 mA or 0 - 20 mA current loop, 0.1% accuracy. Serial port RS485. Programmable output frequency: 12…9999 Hz. Output relays 1A/125VAC or 2A/30VDC for volume pulses or alarms.
	Dimensions	Fixed type: 251 x 92 x 80 mm.
	Weight	Fixed type: 3.1 kg
ENVIRONMENTAL AND OPERATIONG CONDITIONS	Temperature	Device: -20°C…+40°C Sensors: -20°C…+80°C
	Humidity	Device: 85% RH (40°C) Sensors: 98% RH (40°C), possible functioning in water less deep than 2 m.

MEASURING ACCURACY	+/- 1% (after calibration) Repeatability: +/-0.2%...0.5% at 0.6…16mt/s Linearity: 0.5% Min measuring cycle: 500 milliseconds
POWER SUPPLY	100 - 240 VAC 50/60Hz – 4 VA or 24VDC - 0,12A Attention!: Negative connector common with negative 0/4-20 mA output.
FUNCTIONING	Continuous

1.2 WIRING AND CONNECTIONS

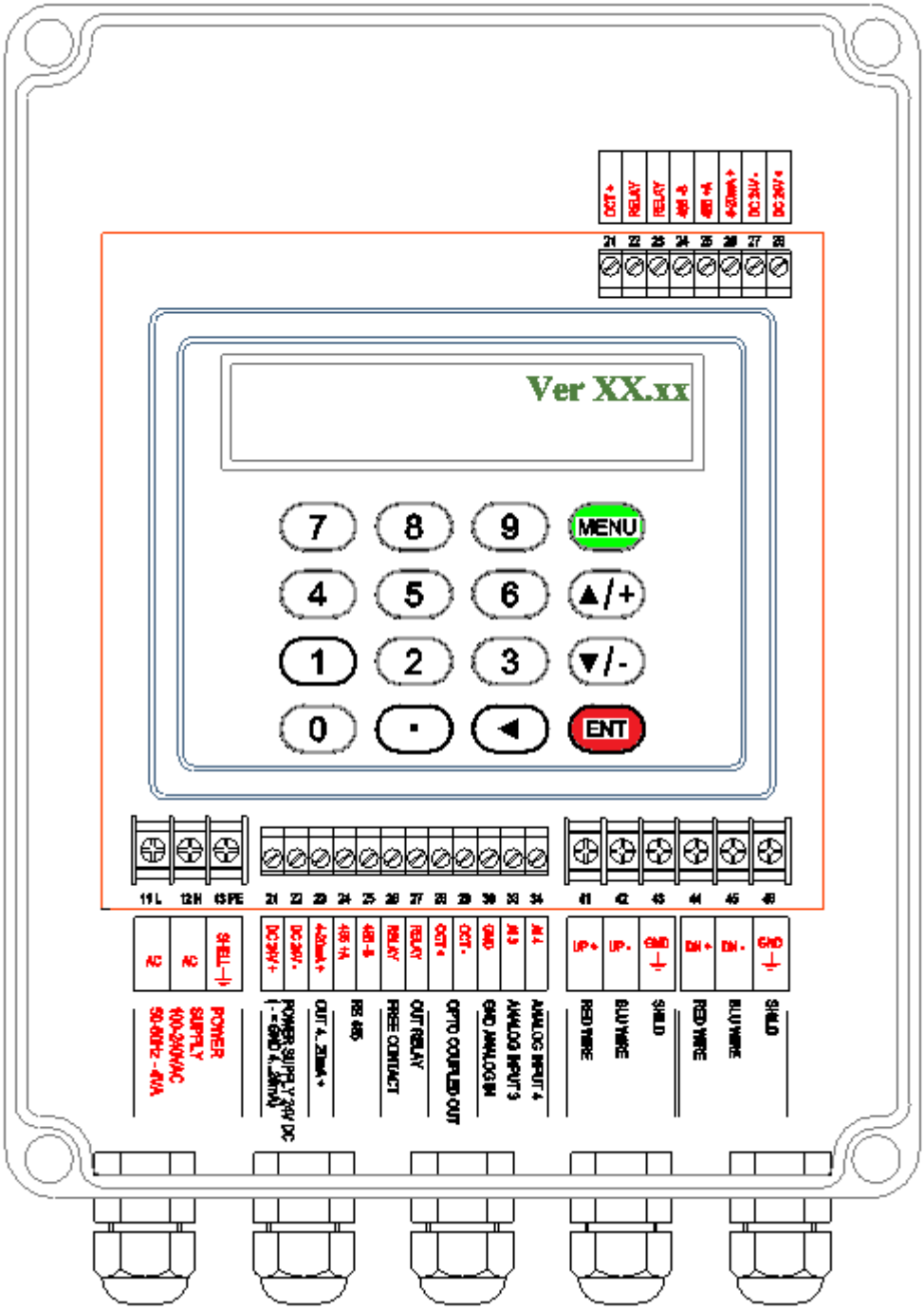

Please use the connector, from left to right, in the following way:

- Clamps "AC IN L", connection for AC supply, phase/live.
- Clamps "AC IN N", connection for AC supply, neutral.

- Clamps "AC IN PE", earth connection/chassis-shell common.
- Clamps "DC IN" respectively + and – for 24 VDC supply.
- RS485- COM PORT communication port.
- Clamps "RELAY" extractable, vertical type, suitable for the connection of the pulse output or alarm.
- Clamps "OCT" suitable for the connection of the frequency output, pulse output, or for the alarm.
- Clamps "AI1, AI2, GND" suitable for the connection of the temperature transmitters in LOOP in 4-20 mA.
- Clamps for ultrasonic sensors respectively up sensor and down sensor. Connect the red wire to the positive pole, and the black wire to the negative pole, the display should be connected only to the GND clamp. Repeat the same connection for both sensors.
- Clamps "4 - 20 mA"connect the signal for a graphic recorder or a process control with 4-20 mA input.

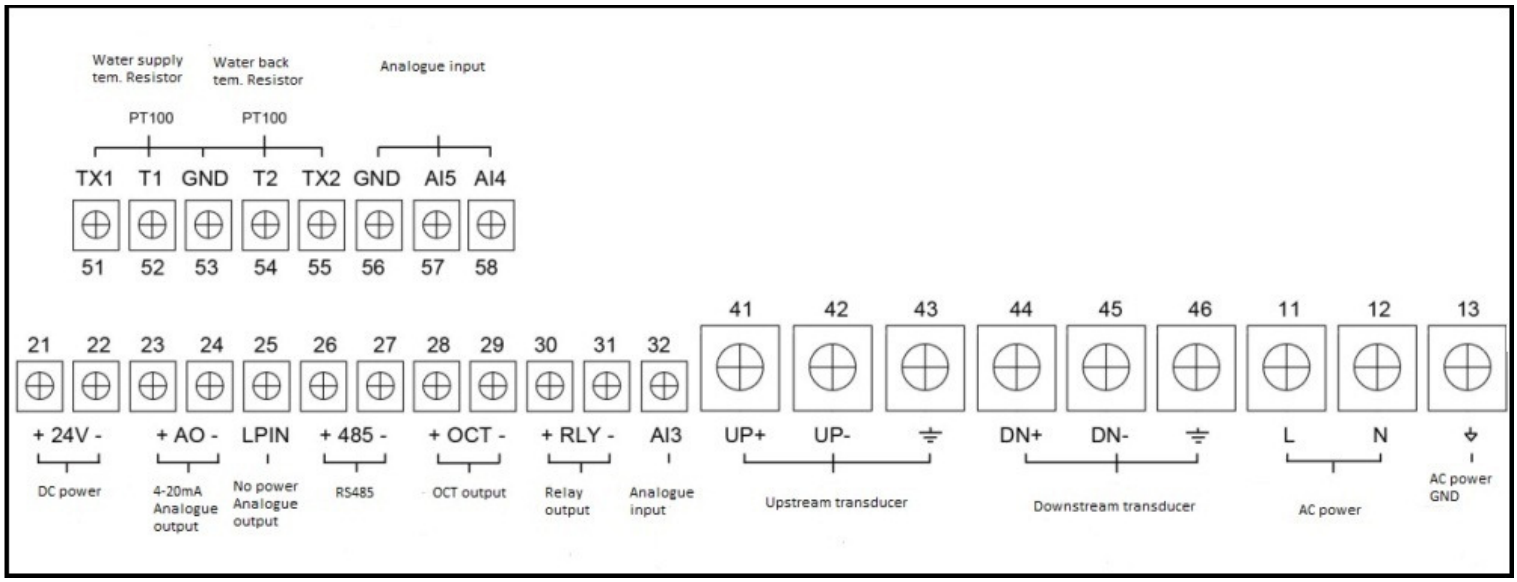

Version 18 – Connection Diagram

1.2.1 Connections

The kind of connection the number of connections, both depend from the application the flow meter is used for.

The minimum necessary connections are:

- Electrical supply AC or DC
- Ultrasonic UP and Down sensors

Warning!!!!!

The sensors must be connected to their clamps only after having momentarily short circuit the red and black cables in order to discharge electrostatic charges generated during the sensors movement.

The crystal inside the transducer acts as a converter and makes the mechanical energy become electrical energy during the mounting.

When the sensors are connecting to the clamp-house, the electrostatic charges into the capacitor, could damage seriously the measuring circuit of the device.

- 4-20 mA output and/or frequency and/or pulses signals
- Temperature measure for calorimeter
- RS485 connection for data saving.

2 INSTALLATION AND OPERATION

The ultrasonic flow meter mounting is a quite simple method. It is only necessary to determine the mounting point in the pipe and knowing some information about the pipe's dimension.

2.1 MEASURING POINT

It is very important to select the right measuring point. The fluid has to be a measurable fluid and the pipe should be indicated among the foreseen for this technology. Please do not hesitate to contact AKTEK ENDUSTRIYEL EKIPMAN VE ENSTRUMANTASYON LTD. STI. for any further clarification.

Please proceed as follows:

1) Select the measuring point on the pipe, in order to have a fluid free from turbulences.
2) The distance of measurement point upstream is 10D, downstream is within 5D. If there is valve upstream, it is suggested to increase the distance up to 30 D.
3) Actually, the device could be installed into pipes with lining, but it is suggested to avoid it above all if the pipe is old or damaged.
4) Select suitable pipes with a uniform kit in order to improve measure and precision.

2.2 REQUIRED INFORMATION

1) Pipe's external diameter.
2) Pipe's internal diameter.
3) Pipe's material or speed of sound through this material.
4) Internal lining (If present).
5) Fluid type (or speed of sound through this fluid).
6) Transducer type.
7) Transducer mounting method (V, Z method or W for little pipe).

Now, in M25 menu it will be possible to see the right mounting distance between the transducers.

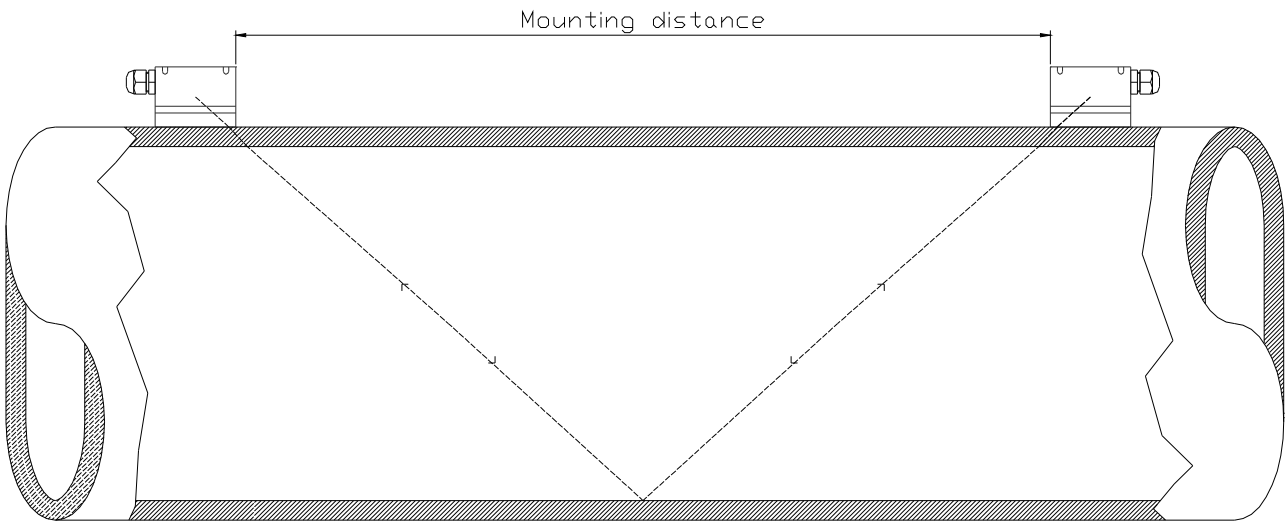

2.3 A PRACTICAL EXAMPLE OF RAPID SETTINGS

The following example represents an application into a DN 400 carbon steel pipe, without lining, with "V" mounted sensors.

IMPORTANT NOTICE: WHEN THE SET-UP IS FINISHED, THE USER MUST RETURN TO MENU 26 AND SELECT OPTION 1. SOLIDIFY SETTINGS, AND THEN PRESS ENTER. IN THIS WAY THE PARAMETE WILL BE SAVED EVEN IF THE POWER SUPPLY GOES OFF.

2.3.1 Fluid & pipe's features

This is a zinc pipe, so its thickness is not a problem. It is also important to measure the perimeter of the pipe: it should be 1286 mm. The pipe is PN10 and it will measure potable water.

2.3.2 Data entry

Switch on the device and it will display the following:

```
Ver. XX.XX
```

Then it will display, (it depend by the last switch off) for example:

```
Flow   0.0000 m3/h *I
No Signal Detected
```

The transducers are not mounted yet and their mounting distance will be displayed only after the programming. Actually the device detects no signals.

Press MENU and the device will display:

```
Flow   0.0000 m3/h *I
Window No.          =
```

Press 1 0 and the device will display the content of window no. 10.

```
Pipe Outer Perimeter
        XXXX mm
```

Press 1 2 8 6 and ENT and that display will turn into this display:

```
Pipe Outer Perimeter
            1286 mm
```

If you press a wrong digit, press ◀ to correct.

Press ▼/- and the device will display:

```
Pipe Outer Diameter
   XXX.XXX mm
```

Press ▼/- and the device will display:

```
Pipe Wall Thickness
            X.X mm
```

Press 6 , . , 5 + ENT and the it will display:

```
Pipe Wall Thickness
            6.5 mm
```

Press ▼/- and the device will display:

```
Pipe Inner Diameter
        396.347 mm
```

The device calculated the displayed value basing on the settings made.

If you want, it is possible to press ▼/- again and the device will display the parameters calculated until now.

Press ▼/- and the device will display:

```
Pipe Material      [14
1.      Stainless Steel
```

The displayed material depends from the material of the pipe you are using.

Press ENT and "1" and ▮ will be blinking.

```
Pipe Material      [14
▮.      Stainless Steel
```

Select the material by using the digits ▲/+ o ▼/-

```
Pipe Material      [14
›0.     Carbon Steel
```

Press ENT and ▼/- and the device will display:

```
Liner Material     [16
   0. None, No Liner
```

In this case, the pipe has no internal lining, so the value "0" is correct.

Press ▼/- and the device will display:

```
Fluid Type         [20
   0.   Water (General)
```

Press ▼/- and the device will display:

```
Transducer Type   [23
   10.  Standard-M1
```

NOTE:

The standard supplied sensors are M sensors, permitting measures in pipes from DN50 up to DN1000. It is possible to ask for different kind of sensors, depending on the measures to be done.

Press ▼/- and the device will display:

```
Transducer Mounting
   0.   V
```

Press ▼/- and the device will display:

```
Transducer Spacing
        385.268 mm
```

The displayed value corresponds to the sensors distance, as shown in par. 2.2.

Now it is possible to mount the transducers, as shown in the following par. 2.4.

Press ▼/- and the device will display:

```
Default settings     [26
1. Solidify settings
```

Press ▼/- and the device will display:

```
Save / Load parameters
```

Press ▼/- o ▲/+ to go through the parameters:

```
Save / Load parameters
 To Browse
```

Or set up one of the 9 (0…8) preset configurations:

```
Save / Load parameters
Entry to LOAD
```

Press ▼/- and the device will display:

```
Save / Load parameters
Entry to SAVE
```

Press ▼/- and the device will display:

```
Save / Load parameters
0: 409,347 mm, Carbon
```

This setting refers to the just set configuration: DN400 carbon steel pipe.

Press ▼/- and the device will display:

```
Save / Load parameters
  Entry to SAVE
```

Press MENU, 1, ENT and the device will display:

```
Flow  0.0000 m3/h *I
No Signal Detected
```

Now it is possible to mount the transducers.

2.4 INSTRUCTIONS FOR CLAMP-ON SENSORS MOUNTING

If you ordered Clamp-on sensors type TS-2, TM-1, TL-1, it is very important to follow the instructions listed below in order to install the sensors correctly:

1. In order to install the sensors, check if the pipe has features which could affect the measure, i.e. rust, dirt…

2. if so, please use a marker

To trace an area bigger than the sensors area

This will help you to delimit the area to be cleaned.

3. Please clean it by using one of the following tools:

Or

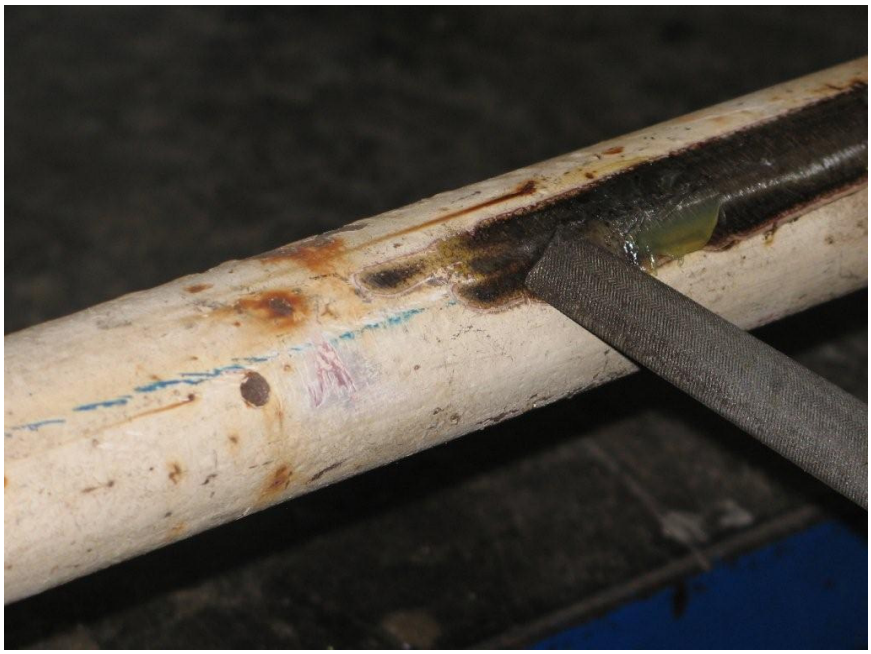

Or

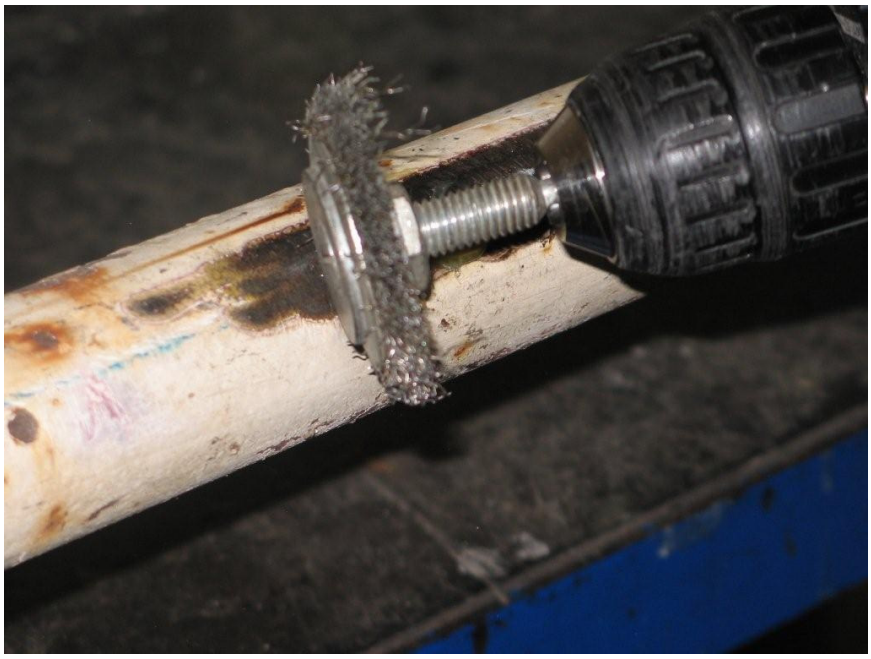

4. The pipe portion in which the sensor will be mounted should be completely clean:

Now the pipe is ready and the clamp-on sensors could be installed.

5. Measure the **pipes' diameter** by using a callipers

Or, if it is not possible to measure the diameter, please measure the **pipe's circumference**:

6. Measure the pipe's thickness.

This could be done by using our **Thickness Gauge TT100-TM8812-NG**

Before using the Thickness Gauge sensors, please remember to use the coupling grease:

Otherwise, the sensors could loose grip to the pipe.

Now place the Thickness Gauge TT100-TM8812-NG sensor and measure the pipe's thickness:

7. when the following values have been entered into device's menus:
   - pipe's diameter (MENU 11) or pipe's circumference (MENU 10)
   - pipe's thickness (MENU 12)
   - type of clamp-on sensors to be used (MENU 23)
   - type of sensors mounting method (MENU 24)

   The device will display the distance at which the sensors should be mounted (MENU 25).

8. Now it is possible to start the sensors installation.

Please remember to use the coupling grease:

Otherwise, the sensor could loose grip to the pipe.

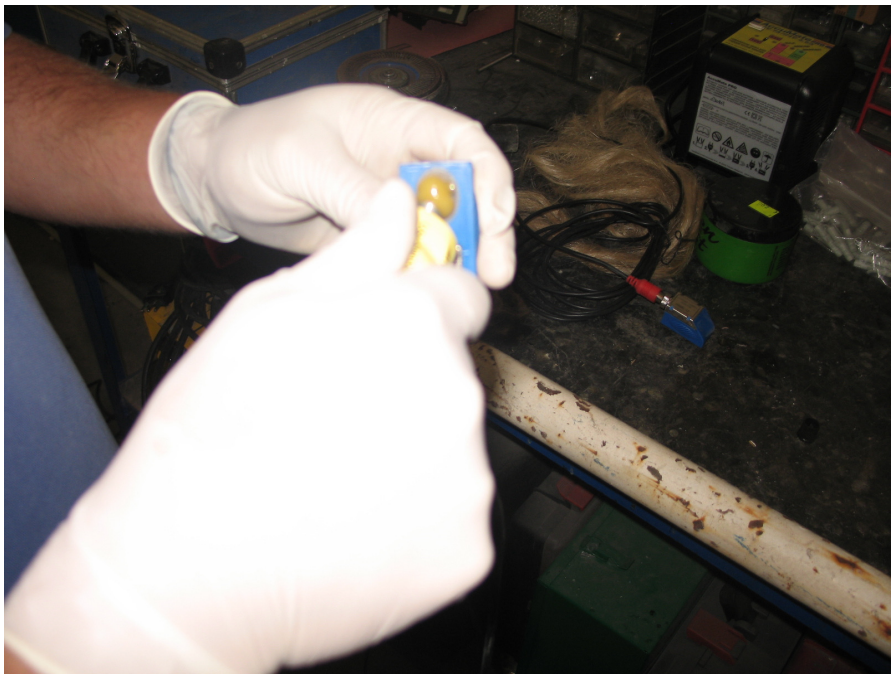

9. Now sensors could be installed by using a fixing bracket:

10. It is necessary to install the sensors according to the distance value the device displays in MENU 25:

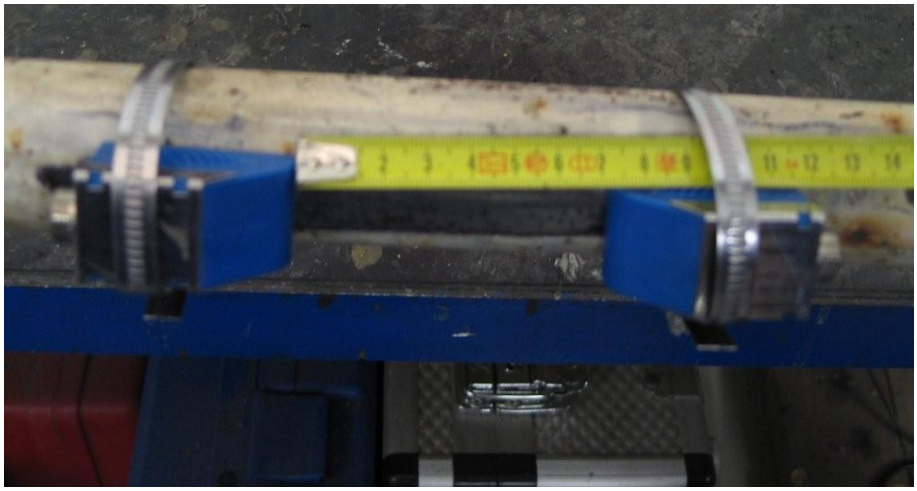

11. Now the clamp-on sensors installation is complete:

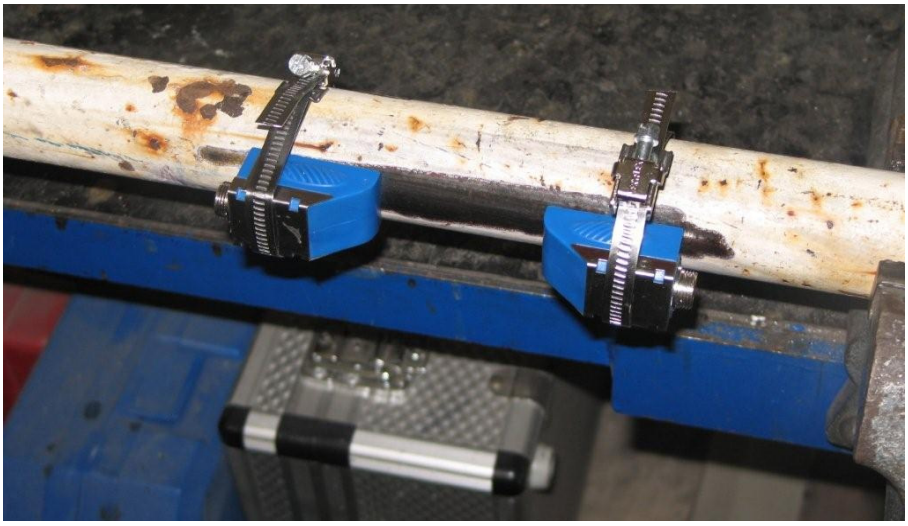

2.5 TRANSDUCER MOUNTING METHODS

The transducers mounting positions are related to the pipes diameters and to the type of sensors we have, so V and Z methods are the most common. By the way, V mounting is suggested.

This type of flow meter enables the N and W mounting methods too.

The letters stands for the number of signal crossings from one transducer to another.

- Z= one crossing. Suitable for pipes > DN250 mm or even smaller.
- V= two crossings. It is the easiest mounting method for pipes until DN600-800 mm with TL-1 or TM-1 transducers.
- N= three crossings. Suitable for small pipes, DN100 or less, with TL-1 transducers.
- W= four crossings. Suitable for DN20 pipes with TS-2 and TL-1 transducers.

The follow sketch shows the various mounting solution for the transducers.

"Z" mounting

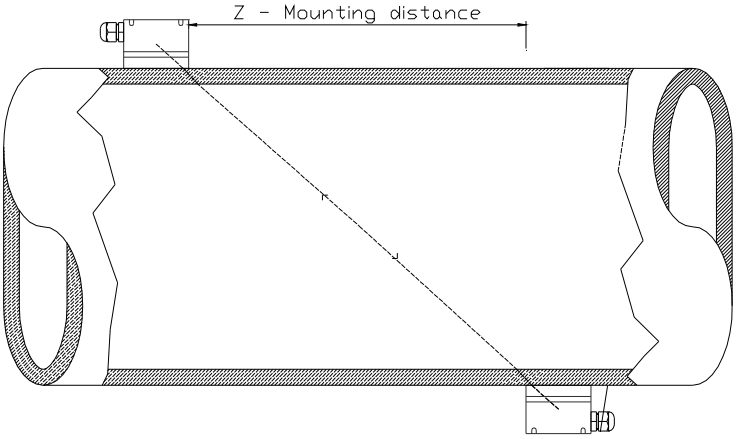

"V" mounting

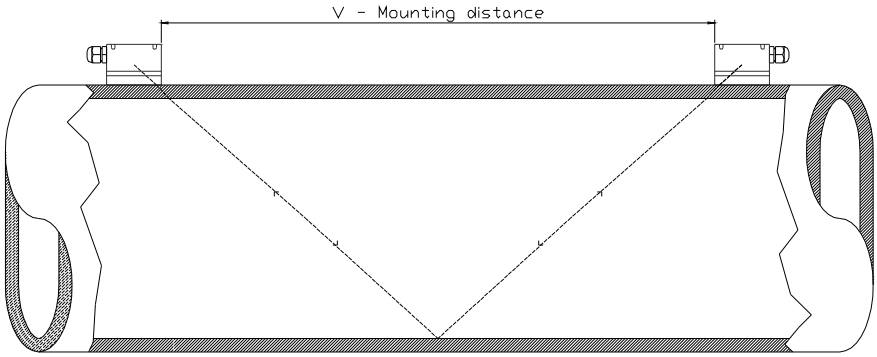

"N" mounting

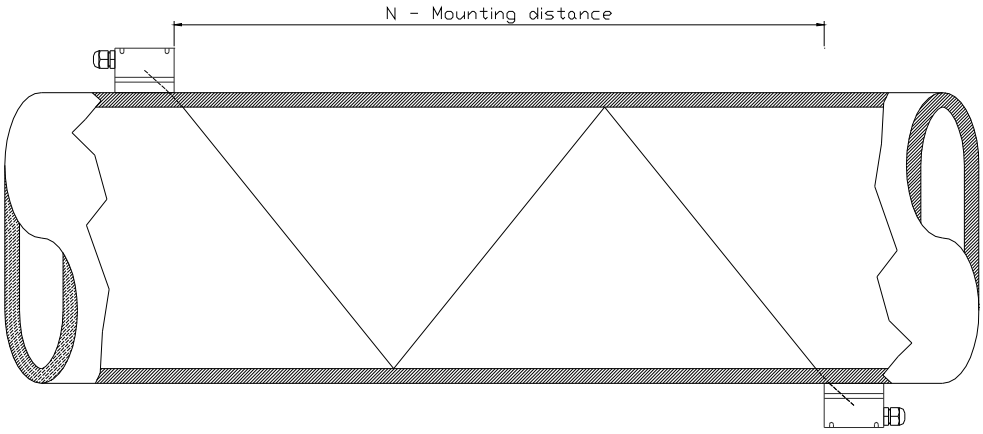

"W" mounting

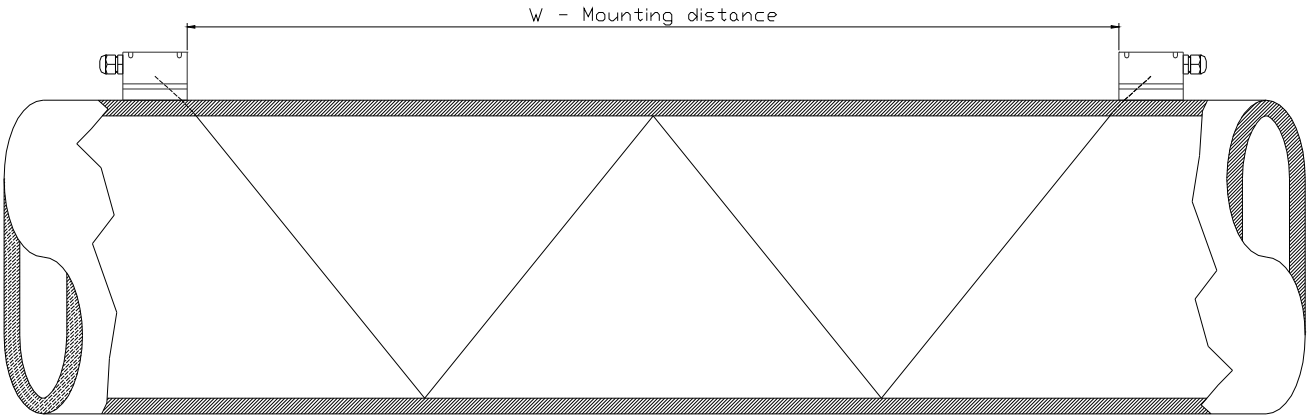

It is possible to apply to almost all the cases the V mounting method: it is the most simple and rapid one.

It is suggested to select the Z mounting method only if the signal strength, UP and DN is smaller than 60 and Q value is smaller than 60, see MENU "90".

```
Strenth+Quality    [90
UP:54.4 DN:56.5 Q=45
```

In this case "Z" mounting is suggested.

2.5.1 “V” mounting

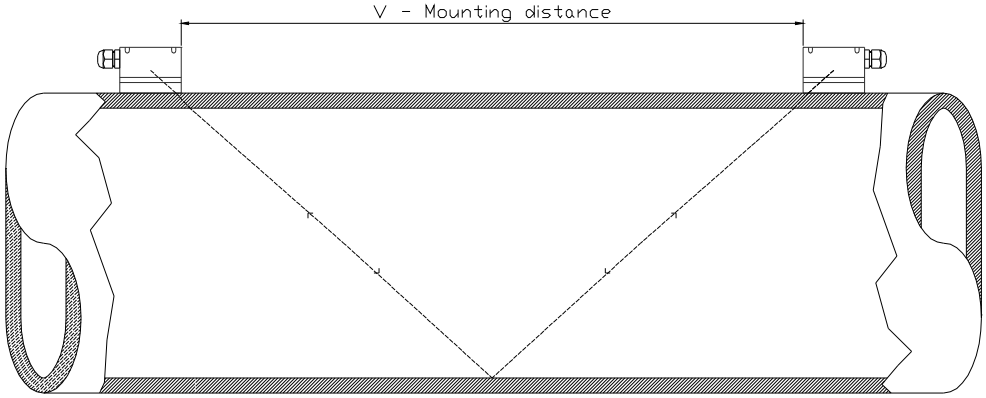

The “v” method uses a bounce into the pipe and the ultrasonic wave goes through more distance. The measuring principle is based on the difference of time and through a “V” distance, the time needed is bigger and the precision higher. In case of horizontal mounting, it is suggested to avoid mounting the sensors on the top or on the bottom of the pipe. Air bubbles on the top could stop the ultrasonic wave and the dump on the bottom decrease and change the ultrasonic entrance angle. Refer to the picture below.

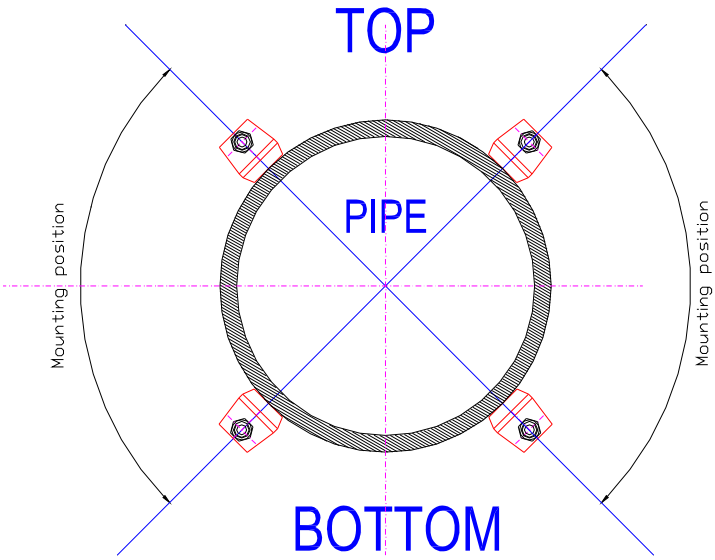

In case of vertical mounting, avoid installing the transducers on downward pipe walls, even if they are under pressure. The pipes with an external lining such as tar, polyethylene, epoxy, should be cleaned when in contact with the transducers.

A tube for acoustic coupling (paste or grease), is included in the supply.

Use a small quantity of coupling grease in order to improve the acoustic contact between the sensor and the pipe’s external surface.

2.5.2 "Z" method

Press 1 if you want to choose "Z" mounting.

```
Transducer Mounting
  1.        Z
```

Press  and the device will display:

```
Transducer Spacing
        192.641 mm
```

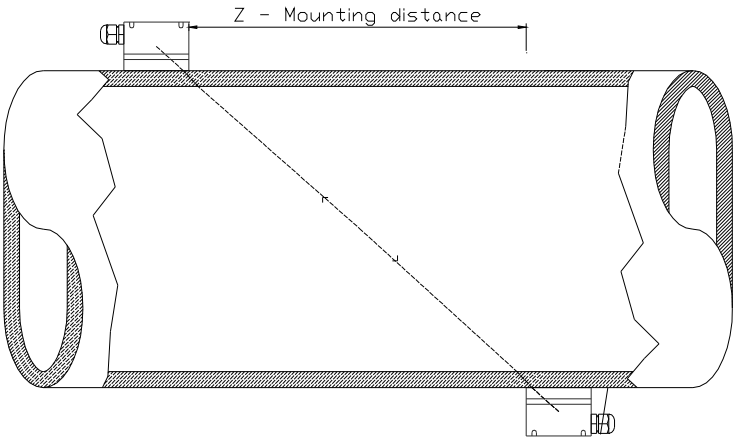

"Z" mounting is more complicated than "V" mounting and it is necessary to create a band of foil as long as the pipe circumference and as wide as indicated in window 25. Additionally, add a piece of paper to wrap the pipe.

Please refer to the picture below for finding the two lines needed to trace the exact half point of the pipe.

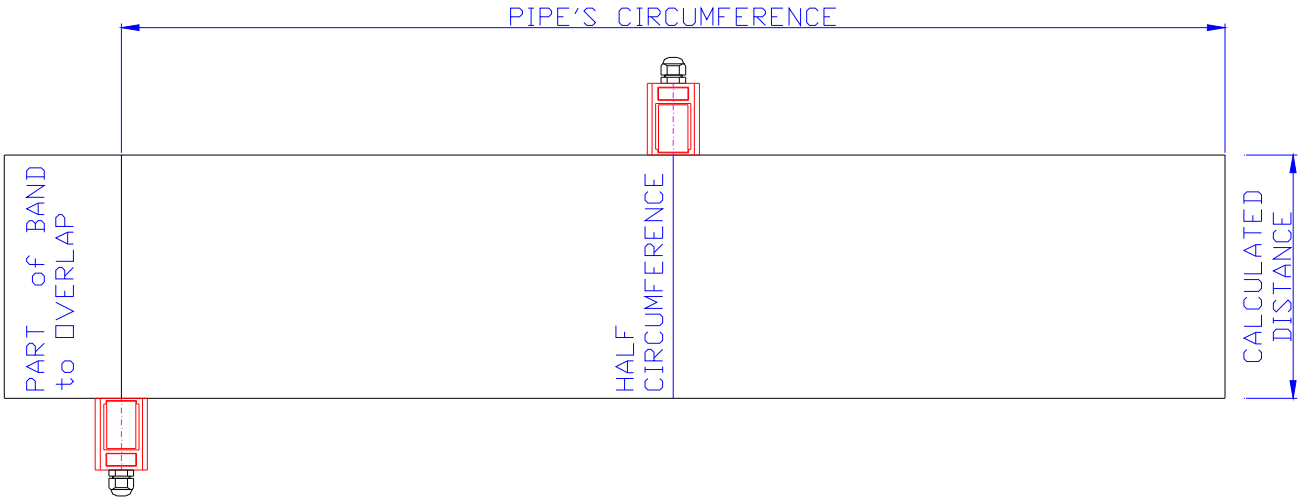

Once the fascia is fixed onto the pipe's circumference (with adhesive tape), it is possible to fix the sensors, as shown in the picture. If the pipe is horizontally mounted, it is suggested to mount the sensors as shown in the next picture. If the pipe is vertically mounted, refer to the instructions of "V" mounting method.

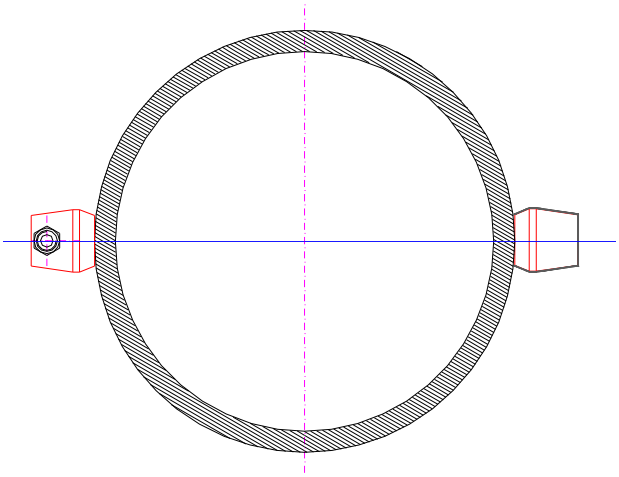

Mounting view for "Z"

2.5.2 "W" & "N" Mounting Methods

These methods are suitable for small pipes, DN100 or less, with TS-2 transducers.

The signal path consists of four crossings (for "W" method) and three crossings (for "N" method) inside the pipe. These methods are used to increase the transit and receiving time because in other ways the signal path in small pipes will be too short.

In "W" method, the sensors are placed on the same side of the pipe at a definite distance, in "N" method; they are placed on the opposite sides of the pipe, at a definite distance.

These methods are not very used because eve small sensors could be mounted by using "Z" method.

To choose "N" method, press 2 while in menu 24.

```
Transducer Mounting
 0.V
```

Press ENT

```
Transducer Mounting
›0.      V
```

Press ▼/- and the device will display:

```
Transducer Mounting
›1.      Z
```

Press ▼/- and the device will display:

```
Transducer Mounting
›2.      N (small pipe)
```

Press ▼/- and the device will display:

```
Transducer Mounting
›3.      W (small pipe)
```

Press ENT

```
Transducer Spacing
                XXX mm
```

Press ▼/- and the device will display:

```
Default Setting [26
 1. Solidify Setting
```

Press ENT

```
Default Setting [26
›1. Solidify Setting
```

Press ENT again the device will display:

```
TDS100        Ver. XX.XX
   S/N=XXXXXXXX
```

And the device will display:

```
Flow        0.0000 m3/h *I
 Vel        0.0000 m/s
```

2.5.3 MOUNTING ANALYSIS

After check up the strength of the received signal, total spreading time, time difference and rate of spreading time, we can confirm whether the mounting is suitable.

2.5.4 Signal strength and quality M90

- **Digit** MENU 9 0

```
Strenth+Quality    [90
UP:xx.x DN:xx.x Q=xx.x
```

The strength of signals is displayed by numbers from 00.0 to 99.9.

00.0 means no signal received, 99.9 means max signal. In normal working conditions, the signal strength should be bigger than 60.0.

The signal quality (Q) is displayed by numbers from 00.0 to 99.9. 00.0 means the signal is the worst. 99.9 mean signal is the best. In normal working conditions, the signal quality should be bigger than 60.0.

During installation, please pay attention signal strength and quality are at the max level.

2.5.5 Total spreading time, time difference M93

- **Digit** MENU 9 3

```
Total Time,Delta Time
623,80uS,  242,12nS
```

The measurement method is based on time difference, so time and values displayed represent the installation done. In normal operating conditions, the time difference should be smaller that ten percent (10%). If the pipe diameter is small or the speed too low, the difference may be a little bigger. If the difference (and also flow and speed) is too big, it means the signal quality is very bad. The reason may be: pipe's features, unsuitable mounting or wrong parameters setting.

2.5.6 Relation between calculated and measured transit time

To know if the sensors are well mounted, you should calculate:

$$Time\_Rate\% = \frac{TOM}{TOS} * 100$$

In normal working conditions it should be 100 +/- 3%.

- **Digit** MENU 9 1

```
TOM/TOS*100        [91
        100,25 %
```

And eventually confirm the right mounting method.

3 DISPLAY WINDOWS

This chapter will explain all the display windows of TFM2100 Series and their contents. The user can enter this menu by pressing

MENU * , * [*][*] represent the number of the window to be displayed.

The following list includes all the available windows.

3.1 FLOW RATE- TOTALIZERS MENU

00 Flow Rate / Net Totalize
01 Flow Rate / Velocity
02 Flow Rate / POS Totalize
03 Flow Rate / NEG Totalize
04 Date Time / Flow Rate
05 Energy Flow Rate / Totalize
06 T1, T2
07 AI3, AI4 Input
08 System Error Code
09 Net Flow Today

3.2 INITIAL SETTING MENU

10 Pipe Outer Perimeter
11 Pipe Outer Diameter
12 Pipe Wall Thickness
13 Pipe Inner Diameter
14 Pipe Material
15 Pipe Sound Velocity
16 Liner Material
(17 Liner Sound Velocity) *if in menu 16 the user chooses "other"*
18 Liner Thickness
19 Inside ABS Thickness
20 Fluid Type
(21 Fluid Sound Velocity) *if in menu 20 the user chooses "other"*
(22 Fluid Sound Viscosity) *if in menu 20 the user chooses "other"*
23 Transducer Type

24 Transducer Mounting
25 Transducer Spacing
26 Default settings
27 Save load parameters
28 Hold on poor signal
29 Empty Pipe Set up

3.3 FLOWRATE UNITS MENU

30 Measurement Unit In
31 Flow Rate Units
32 Totalizer Units
33 Totalizer Multiplier
34 NET Totalize
35 POS Totalize
36 NEG Totalize
37 Totalizer Reset
38 Manual Totalizer
39 Language Selection

3.4 OPTIONAL SETTING MENU

40 Damping
41 Low Flow Cutoff
42 Set Zero
43 Reset Zero
44 Manual Zero Point
45 Scale Factor
46 Network IDN
47 System Lock
48 Entry to calibration data
49 Serial Port traffic

3.5 INPUTS/ OUTPUTS MENU

50 Data Logger Option
51 Data Logger Time Setup

52 Send log data to
53 Analog Input AI5
54 OCT Pulse width
55 CL Mode Select
56 CL 4Ma Output Value
57 CL 20Ma Output Value
58 CL Checkup
59 CL Current Output
60 Date and Time
61 Software Version and ESN
62 RS-485 / RS-232 Setup
63 Select comm. protocol
64 AI3 Value Range
65 AI4 Value Range
66 AI5 Value Range
67 FO Frequency Range
68 Low FO Flow Rate
69 High FO Flow Rate
70 LCD Backlight Option
71 LCD Contrast
72 Working Timer
73 Alarm #1 Low Value
74 Alarm #1 High Value
75 Alarm #2 Low Value
76 Alarm #2 High Value
77 Beeper Setup
78 OCT Output Setup
79 Relay Output Setup
80 Batch trigger select
81 Flow Batch Controller
82 Date Totalizer
83 Automatic Amending
84 Energy Unit Select
85 Temperature Select
86 Specific Heat Select
87 Energy Totalizer ON/OFF
88 Energy Multiplier

89 Differential temperature

3.6 DIAGNOSTICS MENU

90 Single Strength and Quality
91 TOM / TOS*100
92 Fluid Sound Velocity
93 Total Time and Delta Time
94 Reynolds Number and Factor

3.7 OTHER DISPLAY MENU

From menu 94 onwards, by pressing

▼/-

It is possible to display some additional information

+ 0	Power ON/OFF Time	+ 5	Calculator
+ 1	Total Work Hours	+ 6	Media velocity Threshold
+ 2	Last Power off Time	+ 7	Total flow for month
+ 3	Last Flow Rate	+ 8	Total flow this year
+ 4	ON/OFF Times	+ 9	Timer

3.8 FLOW RATE - TOTALIZERS MENU ANALYSIS

- **Digit MENU 0 0 and the device will display**

```
Flow     123.00 m3/h     *R
NET          +3452x1m3
```

The scaling units should be set up in menu M31 and M32.

NET is the net totalizer, result of adding the positive totalizer POS to the negative totalizer NEG.

- **Digit MENU 0 1 and the device will display**

```
Flow     123.00 m3/h     *R
Vel      0.5678 m/s
```

The scaling units should be set up in menu M30 and M31.

- **Digit MENU 0 2 and the device will display**

```
Flow     123.00 m3/h     *R
POS            +3452x1m3
```

The scaling units should be set up in menu M3. The POS value refers to the positive totalizer.

- **Digit MENU 0 3 and the device will display**

```
Flow     123.00 m3/h     *R
NEG            +0000x1m3
```

The scaling units should be set up in menu M31 and M36. The NEG value refers to the negative totalizer.

- **Digit MENU 0 4 and the device will display**

```
06-08-12       09:54:00   *R
Flow     123.00 m3/h
```

This window displays date and time in the following format yy-mm-dd; hh-mm-ss, and the current flow rate.

Date and time should be set up in menu M60.

- **Digit MENU 0 5 and the device will display**

```
EFR      0.0000 GJ/h     *R
E.T            0E+0 GJ
```

This window displays the energy flow and the totalized energy. Pls refer to the part of the manual explaining energy measurements, M84.

- **Digit MENU 0 6 and the device will display**

```
T1= 0.0045: -12.456
T2= 0.0056: -12.547
```

This window displays the analog inputs 1 and 2, respectively: current value and conversion into scaled units.

- **Digit MENU 0 7 and the device will display**

```
AI3= 0.0055: -12.463
AI4= 0.0058: -12.567
```

This window displays the analog inputs 3 and 4, respectively: current value and conversion into scaled units.

- **Digit MENU 0 8 and the device will display**

```
*R-----------------------
   System Normal
```

This window displays the error codes. Please refer to the list of complete error codes.

- **Digit MENU 0 9 and the device will display**

```
Net Flow Today     M09
        345.34 m3
```

This window displays the net daily flow rate.

3.9 INITIAL SETTING MENU ANALYSIS

- **Digit MENU 1 0 and the device will display**

```
Pipe Outer Perimeter
              1286 mm
```

This window is used to set up the pipe's perimeter, if known or measurable.

- **Digit MENU 1 1 and the device will display**

```
Pipe Outer Diameter
        409.347 mm
```

This window is used to set up the external pipe's perimeter. When the external perimeter is set up, the external pip's diameter is set up automatically too.

- **Digit MENU 1 2 and the device will display**

```
Pipe Wall Thickness
              6.5 mm
```

This window is used to set up the pipe's thickness. It is also possible to pass over this menu and go to the menu M13, used to set up the internal pipe's diameter.

- **Digit MENU 1 3 and the device will display**

```
Pipe Inner Diameter
            396,347 mm
```

This window is used to set up the net pipe's internal diameter.

- **Digit MENU 1 4 and the device will display**

```
Pipe Material          [14
0.  Carbon Steel
```

This window is used to set up the pipe's material.

Press ENTER to activate the material selection.

Use the arrow keys, ▲/+ or ▼/- to scroll among the list:

0. carbon steel
1. stainless steel
2. cast iron
3. ductile iron
4. copper
5. PVC
6. aluminum
7. asbestos
8. fiberglass-epoxy
9. other

FOR INFORMATION ABOUT THE SOUND SPEED IN OTHER TYPES OF MATERIAL THAT ARE NOT INCLUDED IN THE LIST, PLEASE REFER TO THE TABLES AT PAGES 77 AND 78.

If in MENU 1 4 you chose "9 – other",

- **digit MENU 1 5 and the device will display**

```
Pipe Sound Velocity
                xxxx m/s
```

Set up the sound speed referring to the construction material of the pipe.

FOR INFORMATION ABOUT THE SOUND SPEED IN OTHER TYPES OF MATERIAL THAT ARE NOT INCLUDED IN THE LIST, PLEASE REFER TO THE TABLES AT PAGES 77 AND 78.

- **Digit MENU 1 6 and the device will display**

```
Liner Material          [16
  0.    None,No Liner
```

This window is used to set up the liner's material.

Press ENT to activate the material selection.

Use the arrow keys to scroll among the list:

0. no liner
1. tar epoxy
2. rubber
3. mortar
4. polypropylene
5. polystyrol
6. polystyrene

7. polyester
8. polyethylene
9. ebonite
10. Teflon
11. other

FOR INFORMATION ABOUT THE SOUND SPEED IN OTHER TYPES OF MATERIAL THAT ARE NOT INCLUDED IN THE LIST, PLEASE REFER TO THE TABLES AT PAGES 77 AND 78.

This window will de displayed only if in M16 the user chose "11. OTHER"

- **Digit MENU 1 7 and the device will display**

```
Liner Sound Velocity
                xxxx m/s
```

Set up the spreading time of sound through the construction material of the liner.

FOR INFORMATION ABOUT THE SOUND SPEED IN OTHER TYPES OF MATERIAL THAT ARE NOT INCLUDED IN THE LIST, PLEASE REFER TO THE TABLES AT PAGES 78 AND 79.

This window will de displayed only if in M16 the user chose "11. OTHER"

- **Digit MENU 1 8 and the device will display**

```
Liner Thickness        [18
                  0 mm
```

Set up the internal liner thickness,

- **Digit MENU 2 0 and the device will display**

```
Fluid Type             [20
   0     Water
```

This window is used to set up the measuring flow type.
Press ENT to enable the fluid selection and use the arrow keys to scroll the list:

0. water – general
1. sea water
2. kerosene
3. gasoline
4. fuel oil
5. crude oil
6. propane (-45C)

7. butane (0C)
8. other liquid
9. diesel oil
10. castor oil
11. peanut oil
12. gasoline 90
13. gasoline 93
14. alcohol
15. water (125C)

Press ENT to confirm.

This window will de displayed only if in M20 the user chose "8. OTHER LIQUID"

- **Digit MENU 2 1 and the device will display**

```
Fluid Sound Velocity
                1482.8 m/s
```

Set up the spreading time of sound through the fluid to be measured.

FOR INFORMATION ABOUT THE SOUND SPEED IN OTHER TYPES OF MATERIAL THAT ARE NOT INCLUDED IN THE LIST, PLEASE REFER TO THE TABLES FROM PAGE 79 TO PAGE 93.

This window will de displayed only if in M20 the user chose "8. OTHER"

- **Digit MENU 2 2 and the device will display**

```
Fluid Viscosity         [22
                1.0038 cST
```

Set up the viscosity of the fluid to be measured.

- **Digit MENU 2 3 and the device will display**

```
Transducer Type         [23
0. Standard-M
```

This window is used to set up the type of transducers.

Press ENT to enable the transducers type selection and use the arrow keys to scroll the list:

0. Standard M
1. Insertion type C
2. Standard S
3. User type

4. Standard B
5. Insertion B(45)
6. Standard L
7. JH Polysonics
8. Standard HS
9. Standard HM
10. Standard M1
11. Standard S1
12. Standard L1
13. PI type
14. FS410 – Fuji
15. FS510 – Fuji
16. **Clamp-on TM-1***
17. Insertion TC-1
18. **Clamp-on TS-1***
19. Clamp-On TS-2
20. **Clamp-on TL-1***
21. Insertion TLC-2

***OUR STANDARD CLAMP-ON SENSORS**

Press ENT to confirm the type of transducers.

Selection No. 3 "USER TYPE" allows the user to install types of sensors not included in the list. In this case, it is necessary to supply some information about the technical features of the new type of sensors:

1. Wedge degree of ultrasonic impulse.

```
Wedge Degree
                45 deg
```

2. Spreading time through sensor.

```
Wedge Sound Velocity
                2720 m/s
```

3. Distance from crystal to sensor wedge.

```
Wedge Distance
                32 mm
```

4. Delay of ultrasonic signal.

```
Wedge Time Delay
                5.18 uS
```

➢ **Digit MENU 2 4 and the device will display**

```
Transducer Mounting
  0.          V
```

This window is used to set up the mounting method of the transducers.

Press ENT to enable the transducers type selection and use the arrow keys to scroll the list:

0. V
1. Z
2. N (small pipes)
3. W (small pipes)

Press ENT to confirm the type of transducers.

➢ **Digit MENU 2 5 and the device will display**

```
Transducer Spacing
                385.268 mm
```

This window informs about the mounting distance of he transducers. See. Par. 2.4 - 2.5.

➢ **Digit MENU 2 6 and the device will display**

```
Default settings
  1. Solidify settings
```

IMPORTANT: WHEN THE SET-UP PROCEDURE IS COMPLETED, THE USER MUST SELECT THE OPTION:

1. SOLIDIFY SETTINGS

IN THIS WAY THE PARAMETER WILL BE SAVED EVEN IF THE POWER SUPPLY GOES OFF.

➢ **Digit MENU 2 6 and the device will display**

```
Default settings
  1. Solidify settings
```

Press ENT and then use the arrow keys to select among:

```
Parameters Setup
   Use RAM settings
```

This window allows the loading of one of the 18 saved configurations (from 0 to 17). Press ENT and then use the arrow keys to select the desired configuration, and then select It.:

This window allows displaying one of the 18 configurations saved. Press ENT and use the arrow keys to scroll among the configurations

Press ENT and a new configuration will be saved. Its main feature is:

```
Parameters Setup
 409.347 mm,Carbon
```

It refers to the last saved setting. The blinking digit is hiding the number of the setting to be saved (from 0 to 17).

- **Digit MENU 2 7 and the device will display**

```
Save /Load parameters
                123379 mm2
```

This window is used to display the current parameters.

- **Digit MENU 2 8 and the device will display**

```
Hold on poor signal
                YES
```

This window is used to set up the device in order to maintain the last reading as valid in case of temporary loss of signal. If NO is selected, output signal could be modified.

- **Digit MENU 2 9 and the device will display**

```
Empty Pipe Setup      [29
                   40
```

This window is used to set up a min threshold. Below that the device considers the pipe as empty. Set up a value among 30 and 40 in order to be sure the device does not measure when the pipe is empty.

3.10 FLOWRATE UNITS MENU ANALYSIS

- **Digit MENU 3 0 and the it will display**

```
Measurement Units      In
   0.    Metric
```

This window is used to set up the measuring system:

0. metric
1. English

Press ENT and then use the arrow keys to choose the measuring system. Confirm with ENT.

- **Digit MENU 3 1 and the it will display**

```
Flow Rate Units        [31
                 m3/h
```

This window is used to set up the measuring flow rate units. Press ENT and then use the arrow keys to select the measuring unit among:

- cubic meters
- liters
- US gallon
- UK gallon
- Million US gallon
- Cubic feet
- US oil barrel
- UK oil barrel

Press ENT to confirm the selection and it will display:

```
Cubic Meters (m3)
■                /hour
```

Use the arrow keys to select the time units to which the current flow rate should refer:

/hour

/day

/min

/sec

Press ENT to confirm the selection.

- **Digit MENU 3 2 and the it will display**

```
Totalizer Units          [32
   Cubic Meters (m3)
```

This window is used to set up totalizing flow rate units, please refer to menu M31 for what concerns Volumetric units and their setting.

Factory settings are in m3.

- **Digit MENU 3 3 and the it will display**

```
Totalizer Multiplier
   3.     X1
```

This window is used to set up the multiplying factor for totalization, in order to avoid reaching the max. counting in a short time.

Press ENT and then use the arrow keys to select among:

0. X 0.001 (1E-3)
1. X 0.01
2. X 0.1
3. X 1
4. X 10
5. X 100
6. X 1000
7. X 10000 (1E+4)

Press ENT to confirm.

- **Digit MENU 3 4 and the it will display**

```
NET Totalizer      [34
                ON
```

This window is used to enable the net totalizer, between positive and negative totalizer. Factory setting is ON.

Press ENT and then use the arrow keys to select ON or OFF. Press ENT to confirm.

- **Digit MENU 3 5 and the it will display**

```
POS Totalizer      [35
                ON
```

This window is used to enable the positive totalizer. Factory setting is ON.

Press ENT and then use the arrow keys to select ON or OFF. Press ENT to confirm.

- **Digit MENU 3 6 and then it will display**

```
NEG Totalizer      [36
              ON
```

This window is used to enable the negative totalizer. Factory setting is ON.

Press ENT and then use the arrow keys to select ON or OFF. Press ENT to confirm.

- **Digit MENU 3 7 and the it will display**

```
Totalizer Reset?   [37
        Selection
```

This window is used to enable the complete or selective zero of internal counters.

Press ENT and then use the arrow keys to select NO or YES. If YES is chosen, please select among:

0. no
1. yes

Press ENT to confirm the selection and the device will display:

```
Select Totalizer
   Reset Finished
```

- **Digit MENU 3 8 and the it will display**

```
Manual Totalizer       [38
Press ENT When Ready
```

This window is used to enable the backlog of totalizes. Press ENT to enable the backlog (ON), press ENT again to disable the backlog (OFF).

- **Digit MENU 3 9 and the it will display**

```
Language语言选择       [39
        English
```

This window is used to select the device's display language.

Press ENT and then use the arrow keys to select the language. Press ENT to confirm.

- **Digit MENU 4 0 and the it will display**

```
Damping                [40
              15 sec
```

This window allows the user to change the value of damping, the seconds needed to display the analog signals and the output signals. The standard value is between 15 and 30 seconds, the setting range goes from 0 to 99 seconds.

- **Digit MENU 4 1 and the it will display**

```
Low Flow Cutoff Val.
                0.03 m/s
```

This window allows the user to set up the speed threshold. Below that level, the device will display 0 flow rate and the totalization is stopped.

- **Digit MENU 4 2 and the it will display**

```
Set Zero                [42
        Press ENT to go
```

This window is used to enable the flow rate zero procedure with a static fluid. The flow into the pipe must be completely static. The zero procedure has beneficial effects both in low and high flow rate.

Warning!!!

If the flow rate is different from 0, the displayed current flow rate will be 0.

Press ENT and the device will display an indicator going right to "0". It will be possible to delete the zero setting by using the next display:

- **Digit MENU 4 3 and the it will display**

```
Reset Zero              [43
                NO
```

This window is used to delete the zero procedure of the previous menu M42 press ENT and then use the arrow keys to display NO or YES, to disable or enable the deleting function.

- **Digit MENU 4 4 and the it will display**

```
Manual Zero Point       [44
                0 m3/h
```

This window is used for setting an offset value to be added or detracted (it depends from the setting polarity) to the current flow rate. Usually, if the user knows very well the current flow rate, this function permits to correct the displayed value.

Press ENT and the arrow keys in order to have a negative offset value, followed by the valued to be added or subtracted. Press ENT again to confirm.

- **Digit MENU 4 5 and the it will display**

```
Scale Factor          [45
                  1
```

This window is used to set up the scale factor value. This value will affect the measure in order to correct the displayed value.

- **Digit MENU 4 6 and the it will display**

```
Network IDN           [46
                 88
```

This window is used to set up the ID value of the net. The values could be set up aiming 0 and 65535 except for 13(0DH enter), 10(0AH enter), 42(2AH*), 38(26H&), 65535.

The ID value is used during the setting operations to identify the device into a net.

- **Digit MENU 4 7 and the it will display**

```
System Lock           [47
****    Unlocked    ****
```

This window is used to set up a password to block the system from unauthorized access. It is composed of a number from 1 up to 4 digits.

- **Digit MENU 4 8 and the it will display**

```
Entry to calibration data [48
              Entry
```

This window is used to set up the calibration.

- **Digit MENU 4 9 and the it will display**

```
Serial port traffic   [49
              xxxxxx
```

This window is used to check the serial port is activated.

3.10.1 INPUTS/ OUTPUTS MENU ANALYSIS

- **Digit MENU 5 0 and the it will display**

```
Data Logger Option
              ON
```

This window is used to enable the data logging by using an external logger.

Press ENT and then use ▲/+ ▼/-, the arrow keys to enable or disable the parameter to be logged.

If ON is chosen, it will be possible to choose among:

0. Date and Time

1. System Status
2. Current Window
3. Signal Strength
4. Flow Rate
5. Velocity
6. NET Totalizer
7. POS Totalizer
8. NEG Totalizer
9. Energy Flow Rate
10. Energy NET Total
11. Energy POS Total
12. Energy NEG Total
13. Fluid viscosity
14. RTD T1
15. RTD T2
16. Analog Input 3
17. analog input 4
18. analog input 5
19. working timer
20. flow today
21. serial number

Press ENT and then use the arrow keys to select the desired parameter to be enable/disabled.

- **Digit MENU 5 1 and the it will display**

This window is used to set up the data logging time.

```
Data Logger Setup        [51
Next xx:xx:xx        XXXX
```

Press ENT or ▼/- to go to the following display:

```
Data logger setup
Start Time = 00:00:00
```

This window is used to set up the data logging start time.

Press ENT or ▼/- to go to the following display:

```
Data logger setup
Interval = 00:00:00
```

This window is used to set up the data logging interval.

Press ENT or ▼/- to go to the following display:

```
Data logger setup
Log Times = XXXX
```

This window is used to set up the number of Log.

Press ENT and the arrow key to go to the following display:

```
Data Logger Setup        [51
Next xx:xx:xx        XXXX
```

Warning!!!

The max time interval between two data logging is 24 hours!

- **Digit MENU 5 2 and the it will display**

```
Send log data to         [52
›1. Send To RS-485
```

This window cannot be changed from the user. It displays information about the data logging by using the RS485. Refer to chapter 5.

- **Digit MENU 5 3 and the it will display**

```
Analog Input AI5  53
AI5 = 0.0234  :  -24.986
```

This window displays the status of A15 current input referring to the conversion in measuring units.

- **Digit MENU 5 4 and the it will display**

```
OCT pulse width   [54
        499.267 mS
```

This window allows to set up the pulses interval.

This value could be 0….500 mS.

We suggest leaving the factory setting unchanged.

Press ENT to confirm.

- **Digit MENU 5 5 and the it will display**

```
CL Mode Select           [55
   0.    4 – 20 mA
```

This window is used to set up the current output features (CL= Current Loop). Press ENT and then use the arrow keys to select among:

0. 4-20 mA

1. 0-20 mA
2. 2 0-20 mA via RS485
3. 4-20 mA vs fluid
4. 20-4-20 mA
5. 0-4-20 mA
6. 20-0-20 mA
7. 4-20 mA vs Velocity
8. 4-20mA vs Energy

Press ENT to confirm the selected item.

- **Digit MENU 5 6 and the it will display**

```
CL        4 mA Output Value
                0 m3/h
```

This window is used to set up the starting range of the output signal for a determined measuring flow rate value. Press ENT and then digit the flow rate starting range value (for example 0 m3/h; if flow rate will be measured in m3). Press ENT again to confirm.

- **Digit MENU 5 7 and the it will display**

```
CL 20 mA Output Value
                500 m3/h
```

This window is used to set up the ending range of the output signal for a determined measuring flow rate value. Press ENT and then digit the flow rate ending range value (for example 500 m3/h, if flow rate will be measured in m3). Press ENT again to confirm.

- **Digit MENU 5 8 and the it will display**

```
CL Checkup              [58
Press ENT When Ready
```

This window allows the simulation of current output in order to check the devices connected to the analog output. Press ENT and then use the arrow keys to select among:

0 mA
4 mA
8 mA
12 mA
16 mA
20 mA

Press ENT again to exit the simulation and the functions in menu M58 will restart.

Warning!!!

HOW COULD THE CURRENT OUTPUT BE CALIBRATED?

Generally, the current outputs is factory set up and calibrate with high precision and rarely is it necessary to change the calibration. If during the simulation M58 the device would measure a value different from the foreseen one, please proceed as follows:

- **Digit MENU ▼/- 0 ENT and the it will display**

```
Hardware Adjusting
› _
```

Digit the code 4 2 1 3 0 6 8 and press ENT and the device will display:

```
AO Hardware Adjusting M1
Press ENT When Ready
```

Press ENT again and the device will display:

```
AO Calibration          [M.1
   4mA==›    9882.2
```

It is suggested to take note of the displayed value (+/-) before changing it. Press the arrow keys and you will be able to change the value, it is also possible to digit it directly. When changed, press ENT again and the device will display:

```
AO Calibration          [M.1
   20mA==›   50112
```

It is suggested to take note of the displayed value (+/-) before changing it. Press the arrow keys and you will be able to change the value, it is also possible to digit it directly. When changed, press ENT again and the device will display:

```
AO Hardware Adjusting M.1
Press ENT When Ready
```

The changed value has been saved into the EEPROM (an internal memory which could be deleted only electrically and which keeps the data saved for almost 10 years).

- **Digit MENU 2 6 and the device will display**

```
Default settings    [26
   1. Solidify settings
```

IMPORTANT: WHEN THE SET-UP PROCEDURE IS COMPLETED, THE USER MUST SELECT THE OPTION:

<u>1. SOLIDIFY SETTINGS</u>

IN THIS WAY THE PARAMETER WILL BE SAVED EVEN IF THE POWER SUPPLY

GOES OFF.

- **Digit MENU 5 9 and the device will display**

```
CL Current Output      [59
            4.0000 mA
```

This window is used to display the actual current output, proportional to the measure and to the setting in M55.

- **Digit MENU 6 0 and the device will display**

```
YY-MM-DD  HH:MM:SS
  09-10-05    09:54:26
```

This window is used to set up date and time. Press ENT and digit: year, month, day of the month, hour, minute and seconds. Press ENT again to confirm the setting. If during setting the user makes a mistake, or if it is necessary to change a value, press the ◀ key until you reach the desired digit and the digit the right number.

- **Digit MENU 6 1 and the device will display**

```
TDS-100            Ver 15.xx
        S/N=XXXXXXXX
```

This window displays the software version and the serial number of the device. Due to continuous software updating, the software versions could be different.

- **Digit MENU 6 2 and the device will display**

```
RS-485 / RS-232 Setup
  19200,          None
```

This window is used to set up the communication parameters of the serial port. Press ENT and then use the arrow keys to select among:

Baud Rate:
19200
14400
9600
4800
2400
1200
600
300

Press ENT to confirm the selected option and then select the parity type among:

None
Even
Odd

Press ENT to confirm the selection and exit the setting.
The other parameters are factory set up: 8 bit data, 1 bit stop and flow control Xon/Xoff.

- **Digit MENU 6 3 and the device will display**

```
Select comm protocol
   MODBUS ASCII + TDS7
```

This window is used to set up the communication protocol.
Select between:

- MODBUS RTU
- MODBUS ASCII + TDS7

- **Digit MENU 6 4 and the device will display**

```
AI3 Value Range        [64
   20 - 100
```

This window is used to set up the conversion into measuring units of 4-20 mA input of analog input 3.
Press ENT and the device will display:

```
AI3 = 4 mA vs. Value
›  _
```

Digit the starting range value and press ENT then press the ▼/- key and the device will display:

```
AI3 = 20 mA vs. Value
                   100
```

Digit the ending range value and press the ▼/- key. The setting is finished.

- **Digit MENU 6 5 and the device will display**

```
AI4 Value Range        [65
   0 - 100
```

This window is used to set up the conversion into measuring units of 4-20 mA input of analog input 4.
Press ENT and the device will display:

```
AI4 = 4 mA vs. Value
                    0
```

Digit the starting range value and press ENT, then press the ▼/- key and the device will display:

```
AI4 = 20 mA vs. Value
                  100
```

Digit the ending range value and press the ▼/- key. The setting is finished.

- **Digit MENU 6 6 and the device will display**

```
AI5 Value Range        [66
   0 - 100
```

This window is used to set up the conversion into measuring units of 4-20 mA input of analog input 4.

Press ENT and the device will display:

```
AI5 = 4 mA vs. Value
                    0
```

Digit the starting range value and press ENT then press the ▼/- key and the device will display:

```
AI5 = 20 mA vs. Value
                  100
```

Digit the ending range value and press the ▼/- key. The setting is finished.

- **Digit MENU 6 7 and the device will display**

```
FO Frequency Range
   0 – 9999
```

This window is used to set up the frequency output in the field 0-9999 Hz, proportionally to the measured flow rate:

Press ENT and ▼/- key. The device will display:

```
Low FO Frequency=
                    0
```

Digit the starting range value and press ENT, then press the ▼/- key and the device will display:

```
High FO Frequency=
                9999
```

Digit the ending range value and press the [▼/-] key. The setting is finished.

Warning!!!

Use the OCT terminals (open collector) to extract the frequency signal.

- **Digit [MENU] [6] [8] and the device will display**

```
Low FO Flow Rate        [68
                0 m3/h
```

This window is used to set up the min. output frequency related to the set up flow rate value.

Press [ENT], digit the value in measuring units and press [ENT] again.

- **Digit [MENU] [6] [9] and the device will display**

```
High FO Flow Rate       [68
                500 m3/h
```

This window is used to set up the max output frequency related to the set up flow rate value.

Press [ENT], digit the value in measuring units and press [ENT] again.

- **Digit [MENU] [7] [0] and the device will display**

```
LCD Backlit Option
   1. Always ON
```

This window is used to set up the display backlight mode. Press [ENT] and then use the arrow keys to enter the seconds.

if you select "60" and press [ENT], it will display:

```
LCD Backlit Option
                  60 sec
```

- **Digit [MENU] [7] [1] and the device will display**

```
LCD Contrast            [71
   10
```

This window is used to set up the display contrast. Press [ENT] and the use the arrow keys to select a value from 0 up to 31. Press [ENT] again to confirm the selection.

- **Digit [MENU] [7] [2] and the device will display**

```
Working Timer          [72
0000000034:54:32
```

This window displays the device working time. Press ENT and then use the arrow keys to delete the device working time. Press ENT to confirm the selection.

- **Digit MENU 7 3 and the device will display**

```
Alarm #1 Low Value
              0 m3/h
```

This window is used to set up the min. flow rate threshold for alarm 1 press ENT, digit the flow rate value and press ENT again.

- **Digit MENU 7 4 and the device will display**

```
Alarm #1 High Value
            500 m3/h
```

This window is used to set up the max flow rate threshold for alarm 1 press ENT, digit the flow rate value and press ENT again.

- **Digit MENU 7 5 and the device will display**

```
Alarm #2 Low Value
              0 m3/h
```

This window is used to set up the min. flow rate threshold for alarm 2. press ENT, digit the flow rate value and press ENT again.

- **Digit MENU 7 6 and the device will display**

```
Alarm #2 High Value
            500 m3/h
```

This window is used to set up the max flow rate threshold for alarm 1. press ENT, digit the flow rate value and press ENT again.

- **Digit MENU 7 7 and the device will display**

```
BEEPER Setup           [77
   16. Not Using
```

This window is used to set up up the buzzer. Press ENT and then use the arrow keys to select among:

0. No Signal
1. Poor Signal
2. Not Ready (No*R)

3. Reverse Flow
4. AO over 100%
5. FO over 120%
6. Alarm #1
7. Reverse Alarm #2
8. Batch Controller
9. POS Int Pulse
10. NEG Int Pulse
11. NET Int Pulse
12. Energy POS Pulse
13. Energy NEG Pulse
14. Energy NET Pulse
15. Upper Threshold Velocity
16. Lower Threshold Velocity
17. ON/OFF via RS485
18. Timer (M51 Daily)
19. Timed Alarm #1
20. Timed Alarm #2
21. Batch Total Full
22. Timer M51
23. batch 90% full
24. key stroking on
25. disable beeper

Press ENT again to confirm the selection.

- **Digit MENU 7 8 and the device will display**

```
OCT Output Setup        [78
   13. FO
```

This window is used to set up the function related to the OCT (open collector) output. Press ENT and then use the arrow keys to select among these options:

0. No Signal
1. Poor Signal
2. Not Ready (No*R)
3. Reverse Flow
4. AO over 100%
5. FO over 120%
6. Alarm #1

7. Reverse Alarm #2
8. Batch Controller
9. POS Int Pulse
10. NEG Int Pulse
11. NET Int Pulse
12. Energy POS Pulse
13. Energy NEG Pulse
14. Energy NET Pulse
15. Upper Threshold Velocity
16. Lower Threshold Velocity
17. ON/OFF via RS485
18. Timer (M51 Daily)
19. Timed Alarm #1
20. Timed Alarm #2
21. Batch Total Full
22. Timer by M51
23. Batch 90% Full
24. Flow Rate Pulse
25. Disable OCT

Press ENT again to confirm the selection.

- **Digit MENU 7 9 and the device will display**

```
RELAY Output Setup
   9. POS Int Pulse
```

This window is used to set up the function related to the relay. Press ENT and then use the arrow keys to select among these options:

0. No Signal
1. Poor Signal
2. Not Ready (No*R)
3. Reverse Flow
4. AO over 100%
5. FO over 120%
6. Alarm #1
7. Reverse Alarm #2
8. Batch Controller
9. POS pulse interval
10. NEG pulse interval

11. NET pulse interval
12. Energy POS pulse
13. Energy NEG pulse
14. Energy NET pulse
15. Upper Threshold Velocity
16. Lower Threshold Velocity
17. ON/OFF via RS485
18. Timer (M51 Daily)
19. Timed Alarm #1
20. Timed Alarm #2
21. Batch Total Full
22. Timer by M51
23. Batch 90% Full
24. Disable Relay

Press ENT again to confirm the selection.

- **Digit MENU 8 0 and the device will display**

```
Batch trigger select
   0.    Key pressing
```

This window is used to set up the function related to the BATCH controller. Press ENT and then use the arrow keys to select one among these options:

0. Key Pressing
1. Serial Port
2. AI3 Rising Edge
3. AI3 Falling Edge
4. AI4 Rising Edge
5. AI5 Falling Edge
6. AI5 Rising Edge
7. AI5 Falling Edge
8. Timer-Periodical
9. Timer Daily

Press ENT again to confirm the selection.

- **Digit MENU 8 1 and the device will display**

```
Flow Batch Controller
          1000 m3
```

This window is used to set up the volume related to the BATCH function. Press ENT, digit the volume value and press ENT again. The device will display:

```
Flow Batch Controller
›
```

If in menu M80 you selected "0" key Input, by pressing ENT the device will display:

```
          1000 m3
ON        0          m3
```

If ON is blinking, the counter "m3" will increase the value until the BATCH volume is reached. The programmed output for this function will change its status. If you press ENT before reaching the BATCH value, the function will stop.

- **Digit MENU 8 2 and the device will display**

```
Date Totalizer     [82
   0.    browse by day
```

This window is used to set up the time for logging the flowed volume. Press ENT and then use the arrow keys to select one option among the following:

0. browse by day
1. browse by month
2. browse by year

Press ENT again to confirm the selection and activate the displaying of the following:

```
00 06-08-11   --G--H-I
›             3456.95    m3
```

The first line display the logging "00" dated 11th of August 2006, other information are related to the current errors, the other line displays the flow rate on the 11th of August 2006 at 23:59:59. press the ▲/+ key to scroll the other 63 loggings. Press ENT to exit this display.

- **Digit MENU 8 3 and the device will display**

```
Automatic Amending
              OFF
```

This window is used to enable the automatic correction of all the totalizer when the device is switched off. The average value (before switching off the device and just after switching on the device) is used to calculate the flowed volume.

Press ENT and then use the arrow keys to display ON or OFF, to enable or disable this function. Press ENT again to confirm the selection.

- **Digit MENU 8 4 and the device will display**

```
Energy Units Select
   0. Giga Joule (GJ)
```

This window is used to select the power measuring units. Press ENT and then use the ▲/+ or ▼/-, to display the following options:

0. Giga Joule (GJ)
1. Kilocalories (KC)
2. KWh
3. BTU

Press ENT again to confirm the selection.

- **Digit MENU 8 5 and the device will display**

```
Temperature Select
   0. From T1, T2
```

This window is used to set up the source for reading the return temperature. Press ENT and then use the arrow keys to display the following options:

0. from T1, T2
1. from AI3, AI4

Press ENT again to confirm the selection.

- **Digit MENU 8 6 and the device will display**

```
Specific Heat Select
   1. Fix Specific Heat
```

This window is used to select the specific heat related into the thermal energy measurement.

- **Digit MENU 8 7 and the device will display**

```
Energy Totler ON/OFF
              ON
```

This window is used to enable the power totalization. Press ENT and the use the arrow keys to display ON or OFF, to enable or to disable this function. Press ENT to confirm the selection.

- **Digit MENU 8 8 and the device will display**

```
Energy Multiplier        88
  4.    x1          (E0)
```

This window is used to set up the multiplier of the totalization, in order to avoid the reaching of the max counting in a too short time.

0. X 0.0001 (E-4)
1. X 0.001 (E-3)
2. X 0.01 (E-2)
3. X 0.1 (E-1)
4. X 1 (E0)
5. X 10 (E1)
6. X 100 (E2)
7. X 1000 (E3)
8. X 10000 (E4)
9. X 100000 (E5)
10. X 1000000 (E6)

Press ENT to confirm the selection.

- **Digit MENU 8 9 and the device will display**

```
Temperature Diff.[89
                0.0000 C
```

This window is used to set up the temperature differential ΔT.

Press ▼/- and the device will display

```
Heat Meter Is On [8.
 1. Inlet
```

Set the Heater measurement system:

0. Outlet
1. Inlet

Press ENT to confirm the selection.

3.11 DIAGNOSTICS MENU ANALYSIS

- **Digit MENU 9 0 and the device will display**

```
Strenth+Quality    [90
UP:xx.x DN:xx.x Q=xx.x
```

This window displays the strength and the quality of the signal with numbers from 00.0 to 99.9.

Means that there is no signal, 99.9 mean that the signal is at its max value.

In normal working conditions the strength signal should be around 60.0.

During installation, please pay attention: the quality and strength have to be at their max values.

- **Digit MENU 9 1 and the device will display**

```
TOM/TOS*100          [91
              100,25 %
```

This window displays the relationship between the transit time and the measured time. In normal working conditions, it should be 100 +/- 3%. Bigger differences indicate an error in mounting or the setting of wrong parameters.

- **Digit MENU 9 2 and the device will display**

```
Fluid Sound Velocity
              1482.56 m/s
```

This window displays the speed of sound through the fluid. In normal working conditions, the value should be similar to the one indicated in menu M21, bigger differences indicate an error during the sensors mounting or an error in the setting of M21.

- **Digit MENU 9 3 and the device will display**

```
Total Time, Delta Time
623,80uS,     242,12nS
```

This window displays the total transit time and the UP-DOWN difference between transit times. The displayed values give information about the installation. In normal working conditions the difference is less than 10%.

If the pipe diameter is small or the fluid velocity is very low, the difference might be a little bigger. If the difference, the flow rate and the speed are too big, they indicate a very bad signal. The causes could be: pipe's features, wrong mounting, wrong parameter setting.

- **Digit MENU 9 4 and the device will display**

```
Reynold Nn. profile      [94
   12234.6     0.92435
```

This window displays the calculated Reynolds's number. It indicates the moving mode inside the pipe.

3.12 OTHER DISPLAYS MENU ANALYSIS

- **Digit MENU 9 6 and the device will display**

```
Power ON/OFF Time        [+0
Press ENT When Ready
```

The device has been switched ON/OFF in a determined date and time.

Press ENT and then use the arrow keys to display the sequence of 64 events (from 00 up to 63) of switching on and switching off.

Press the ▼/- key to display:

```
Total Work Hours         [+1
   00000135:34:45
```

Press the ▼/- key to display:

```
Last Power Off Time
   06-08-12   09:34:26
```

Press the ▼/- key to display:

```
Last Flow Rate           [+3
   0 m3/h
```

Press the ▼/- key to display:

```
ON/OFF Times             [+4
                     32
```

Press the ▼/- key to display:

```
Calculator: Input X=
                      0
```

It is used as a regular calculator, setting X value, and then Y value. Press ENT to calculate.

Press the ▼/- key to display:

```
Media velocity Threshold
                    1 m/s
```

The set up value is used as a threshold to generate an alarm on the relay or on they OCT when it has been passed.

Press the ▼/- key to display:

```
Total flow for month
```

Press the ▼/- key to display:

```
Total flow this year
```

Press the ▼/- key to display:

```
No-ready timer
```

4 DIAGNOSTICS AND PROBLEM SOLVING

The TFM2100-NG has a complete series of diagnostics functions: it measures and checks for errors continuously. The continuous displaying of errors helps the customer identifying damages or unacceptable working conditions.

Displayed errors could happen:

- When switching on the device, during the initial test.
- During functioning, with error codes, in window M108.

Causes and solutions are indicated in the below following table:

4.1 AUTOTEST DURING SWITCHING ON AND POSSIBLE SOLUTIONS

ERROR DESCRIPTION	**SOLUTIONS**
ROM PARITY ERROR	Contact AKTEK.
STORED DATA ERROR	Digit ENT again during the initial set up up.
HAND SHAKING ERR =*	Switch off and then switch on.
CPU FATAL ERROR	Contact AKTEK.
TIMER SLOW ERROR TIMER FAST ERROR	Switch off and then switch on or contact AKTEK.
SYSTEM RAM ERROR	Switch off and then switch on or contact AKTEK.
TIME OR BATT ERROR	Switch off and then switch on or contact AKTEK.
LCD TIMEOVER ERROR	Check the display or the electronics connections.
PRN TIME OVER	Check the printer or the connections.

4.2 ERROR CODES, CAUSES AND SOLUTIONS DURING FUNCTIONING

ERROR CODE	INFORMATION IN M08 WINDOW	CAUSES	SOLUTIONS
*R	Normal system	Regular functioning	
*J	Sub CPU wrong	Damage in sub CPU	Contact AKTEK.
*I	No signal detected	No signal detected: - sensor far from the pipe or not so coupling - wrong sensors mounting - too many oxide or dump inside the pipe - new linearity	- check the acoustic contact with the pipe's surface. - use another coupling grease - check initial settings - try to reduce the pipe's internal dumps or change the sensors position - wait for stable linearity.
*H	Low strength signal	Low signal strength	SEE ABOVE
*H	Poor quality signal	Poor signal quality	SEE ABOVE
*Q	Freq output power	Output frequency bigger than 120%, very high flow rate or wrong settings.	Check again the settings in M66 and in M69 or simply confirm that the flow rate should be so big.
*E	Over current loop	Output current bigger than 100%, very high flow rate or wrong settings.	Check again the settings in M66 or simply confirm that the flow rate should be so big.
*F	Ref. to table 1	Please find the problem during initial test.	Switch off and then switch on or contact AKTEK.
*G	ADJ GAIN= S1 ADJ GAIN= S2 ADJ GAIN= S3 ADJ GAIN= S4	THE DEVICE IS DOING THE AUTOTEST REGULATIONS.	

5 APPENDIX

5.1 SOUND SPEEDS IN SOLIDS

Table 1: Sound Speeds in Solids

Material	Sound Speed* Shear Wave (25°C)		Sound Speed* Long. Wave (25°C)	
	m/s	ft/s	mm/µs	in./µs
Steel, 1% Carbon, hardened	3,150	10,335	5.88	0.2315
Carbon Steel	3,230	10,598	5.89	0.2319
Mild Steel	3,235	10,614	5.89	0.2319
Steel, 1% Carbon	3,220	10,565		
302 Stainless Steel	3,120	10,236	5.690	0.224
303 Stainless Steel	3,120	10,236	5.640	0.222
304 Stainless Steel	3,141	10,306	5.920	0.233
304L Stainless Steel	3,070	10,073	5.790	0.228
316 Stainless Steel	3,272	10,735	5.720	0.225
347 Stainless Steel	3,095	10,512	5.720	0.225
Aluminum	3,100	10,171	6.32	0.2488
Aluminum (rolled)	3,040	9,974		
Copper	2,260	7,415	4.66	0.1835
Copper (annealed)	2,325	7,628		
Copper (rolled)	2,270	7,448		
CuNi (70%Cu 30%Ni)	2,540	8,334	5.03	0.1980
CuNi (90%Cu 10%Ni)	2,060	6,759	4.01	0.1579
Brass (Naval)	2,120	6,923	4.43	0.1744
Gold (hard-drawn)	1,200	3,937	3.24	0.1276
Inconel	3,020	9,909	5.82	0.2291
Iron (electrolytic)	3,240	10,630	5.90	0.2323
Iron (Armco)	3,240	10,630	5.90	0.2323

**Please note these values are to be considered nominal. Solids may be inhomogenous and anisotropic. Actual values depend on exact composition, temperature, and to a lesser extent, on pressure or stress.*

Table 1: Sound Speeds in Solids (cont.)

Material	Sound Speed* Shear Wave (25°C)		Sound Speed* Long. Wave (25°C)	
	m/s	(ft/s)	mm/µs	in/µs
Ductile Iron	3,000	9,843		
Cast Iron	2,500	8,203	4.55	0.1791
Monel	2,720	8,924	5.35	0.2106
Nickel	2,960	9,712	5.63	0.2217
Tin, rolled	1,670	5,479	3.32	0.1307
Titanium	3,125	10,253	6.10	0.2402
Tungsten, annealed	2,890	9,482	5.18	0.2039
Tungsten, drawn	2,640	8,661		
Tungsten, carbide	3,980	13,058		
Zinc, rolled	2,440	8,005	4.17	0.1642
Glass, Pyrex	3,280	10,761	5.61	0.2209
Glass, heavy silicate flint	2,380	7,808		
Glass, light borate crown	2,840	9,318	5.26	0.2071
Nylon	1,150	3,772	2.40	0.0945
Nylon, 6-6	1,070	3,510		
Polyethylene (HD)			2.31	0.0909
Polyethylene (LD)	540	1,772	1.94	0.0764
PVC, CPVC	1,060	3,477	2.40	0.0945
Acrylic	1,430	4,690	2.73	0.1075
Asbestos Cement			2.20	0.0866
Tar Epoxy			2.00	0.0787
Mortar			2.50	0.0984
Rubber			1.90	0.0748

**Please note these values are to be considered nominal. Solids may be inhomogenous and anisotropic. Actual values depend on exact composition, temperature, and to a lesser extent, on pressure or stress.*

5.2 SOUND SPEEDS IN FLUIDS

Table 2: Sound Speeds in Fluids

Substance	Chemical Formula	*All data given at 25°C (77°F) unless otherwise noted.*					
		Specific Gravity	Sound Speed		Δv/°C	Kinematic Viscosity x10^{-6}	
			m/s	ft/s	m/s/°C	m^2/s	ft^2/s
Acetic anhydride (22)	$(CH_3CO)_2O$	1.082 (20°C)	1,180	3,871.4	2.5	0.769	8.274
Acetic acid, anhydride (22)	$(CH_3CO)_2O$	1.082 (20°C)	1,180	3,871.4	2.5	0.769	8.274
Acetic acid, nitrile	C_2H_3N	0.783	1,290	4,232.3	4.1	0.441	4.745
Acetic acid, ethyl ester (33)	$C_4H_8O_2$	0.901	1,085	3,559.7	4.4	0.467	5.025
Acetic acid, methyl ester	$C_3H_6O_2$	0.934	1,211	3,973.1		0.407	4.379
Acetone	C_3H_6O	0.791	1,174	3,851.7	4.5	0.399	4.293
Acetonitrile	C_2H_3N	0.783	1,290	4,232.3	4.1	0.441	4.745
Acetonylacetone	$C_6H_{10}O_2$	0.729	1,399	4,589.9	3.6		
Acetylen dichloride	$C_2H_2Cl_2$	1.26	1,015	3,330.1	3.8	0.400	4.304
Acetylene tetrabromide (47)	$C_2H_2Br_4$	2.966	1,027	3,369.4			
Acetylene tetrachloride (47)	$C_2H_2Cl_4$	1.595	1,147	3,763.1		1.156 (15°C)	12.438 (59°F)
Alcohol	C_2H_6O	0.789	1,207	3,960	4.0	1.396	15.02
Alkazene-13	$C_{15}H_{24}$	0.86	1,317	4,320.9	3.9		
Alkazene-25	$C_{10}H_{12}Cl_2$	1.20	1,307	4,288.1	3.4		
2-Amino-ethanol	C_2H_7NO	1.018	1,724	5,656.2	3.4		
2-Aminotolidine (46)	C_7H_9N	0.999 (20°C)	1,618	5,308.4		4.394 (20°C)	47.279 (68°F)
4-Aminotolidine (46)	C_7H_9N	0.966 (45°C)	1,480	4,855.6		1.863 (50°C)	20.045 (122°F)
Ammonia (35)	NH_3	0.771	1,729 (-33°C)	5,672.6 (-27°F)	6.68	0.292 (-33°C)	3.141 (-27°F)
Amorphous Polyolefin		0.98	962.6 (190°C)	3158.2 (374°F)		26,600	286,000
t-Amyl alcohol	$C_5H_{12}O$	0.81	1,204	3,950.1		4.374	47.064
Aminobenzene (41)	$C_6H_5NO_2$	1.022	1,639	5,377.3	4.0	3.63	39.058
Aniline (41)	$C_6H_5NO_2$	1.022	1,639	5,377.3	4.0	3.63	39.058
Argon (45)	Ar	1.400 (-188°C)	853 (-188°C)	2798.6 (-306°F)			

Table 2: Sound Speeds in Fluids (cont.)

Substance	Chemical Formula	*All data given at 25°C (77°F) unless othenwise noted.*					
		Specific Gravity	Sound Speed		Δv/°C	Kinematic Viscosity x10^{-6}	
			m/s	ft/s	m/s/°C	m^2/s	ft^2/s
Azine	C_6H_5N	0.982	1,415	4,642.4	4.1	0.992 (20°C)	10.673 (68°F)
Benzene (29, 40, 41)	C_6H_6	0.879	1,306	4,284.8	4.65	0.711	7.65
Benzol (29, 40, 41)	C_6H_6	0.879	1,306	4,284.8	4.65	0.711	7.65
Bromine (21)	Br_2	2.928	889	2,916.7	3.0	0.323	3.475
Bromo-benzene (46)	C_6H_5Br	1.522	1,170 (20°C)	3,838.6 (68°F)		0.693	7.456
1-Bromo-butane (46)	C_4H_9Br	1.276 (20°C)	1,019 (20°C)	3,343.2 (68°F)		0.49 (15°C)	5.272 (59°F)
Bromo-ethane (46)	C_2H_5Br	1.460 (20°C)	900 (20°C)	2,952.8 (68°F)		0.275	2.959
Bromoform (46, 47)	$CHBr_3$	2.89 (20°C)	918	3,011.8	3.1	0.654	7.037
n-Butane (2)	C_4H_{10}	0.601 (0°C)	1,085 (-5°C)	3,559.7 (23°F)	5.8		
2-Butanol	$C_4H_{10}O$	0.81	1,240	4,068.2	3.3	3.239	34.851
sec-Butylalcohol	$C_4H_{10}O$	0.81	1,240	4,068.2	3.3	3.239	34.851
n-Butyl bromide (46)	C_4H_9Br	1.276 (20°C)	1,019 (20°C)	3,343.2 (68°F)		0.49 (15°C)	5.272 (59°F)
n-Butyl chloride (22, 46)	C_4H_9Cl	0.887	1,140	3,740.2	4.57	0.529 (15°C)	5.692 (59°F)
tert Butyl chloride	C_4H_9Cl	0.84	984	3,228.3	4.2	0.646	6.95
Butyl oleate	$C_{22}H_{42}O_2$		1,404	4,606.3	3.0		
2, 3 Butylene glycol	$C_4H_{10}O_2$	1.019	1,484	4,868.8	1.51		
Cadmium (7)	Cd		2,237.7 (400°C)	7,341.5 (752°F)		1.355cp (440°C)	14.579 (824°F)
Carbinol (40, 41)	CH_4O	0.791 (20°C)	1,076	3,530.2	2.92	0.695	7.478
Carbitol	$C_6H_{14}O_3$	0.988	1,458	4,783.5			
Carbon dioxide (26)	CO_2	1.101 (-37°C)	839 (-37°C)	2,752.6 (-35°F)	7.71	0.137 (-37°C)	1.474 (-35°F)
Carbon disulphide	CS_2	1.261 (22°C)	1,149	3,769.7		0.278	2.991

Table 2: Sound Speeds in Fluids (cont.)

Substance	Chemical Formula	*All data given at 25°C (77°F) unless otherwise noted.*					
		Specific Gravity	Sound Speed		Δv/°C	Kinematic Viscosity x10^{-6}	
			m/s	ft/s	m/s/°C	m^2/s	ft^2/s
Carbon tetrachloride (33, 35, 47)	CCl_4	1.595 (20°C)	926	3038.1	2.48	0.607	6.531
Carbon tetrafluoride (14) (Freon 14)	CF_4	1.75 (-150°C)	875.2 (-150°C)	2,871.5 (-238°F)	6.61		
Cetane (23)	$C_{16}H_{34}$	0.773 (20°C)	1,338	4,389.8	3.71	4.32	46.483
Chloro-benezene	C_6H_5Cl	1.106	1,273	4,176.5	3.6	0.722	7.768
1-Chloro-butane (22, 46)	C_4H_9Cl	0.887	1,140	3,740.2	4.57	0.529 (15°C)	5.692 (59°F)
Chloro-diFluoromethane (3) (Freon 22)	$CHClF_2$	1.491 (-69°C)	893.9 (-50°C)	2,932.7 (-58°F)	4.79		
Chloroform (47)	$CHCl_3$	1.489	979	3,211.9	3.4	0.55	5.918
1-Chloro-propane (47)	C_3H_7Cl	0.892	1,058	3,471.1		0.378	4.067
Chlorotrifluoromethane (5)	$CClF_3$		724 (-82°C)	2,375.3 (-116°F)	5.26		
Cinnamaldehyde	C_9H_8O	1.112	1,554	5,098.4	3.2		
Cinnamic aldehyde	C_9H_8O	1.112	1,554	5,098.4	3.2		
Colamine	C_2H_7NO	1.018	1,724	5,656.2	3.4		
o-Cresol (46)	C_7H_8O	1.047 (20°C)	1,541 (20°C)	5,055.8 (68°F)		4.29 (40°C)	46.16 (104°F)
m-Cresol (46)	C_7H_8O	1.034 (20°C)	1,500 (20°C)	4,921.3 (68°F)		5.979 (40°C)	64.334 (104°F)
Cyanomethane	C_2H_3N	0.783	1,290	4,232.3	4.1	0.441	4.745
Cyclohexane (15)	C_6H_{12}	0.779 (20°C)	1,248	4,094.5	5.41	1.31 (17°C)	14.095 (63°F)
Cyclohexanol	$C_6H_{12}O$	0.962	1,454	4,770.3	3.6	0.071 (17°C)	0.764 (63°F)
Cyclohexanone	$C_6H_{10}O$	0.948	1,423	4,668.6	4.0		
Decane (46)	$C_{10}H_{22}$	0.730	1,252	4,107.6		1.26 (20°C)	13.55 (68°F)
1-Decene (27)	$C_{10}H_{20}$	0.746	1,235	4,051.8	4.0		
n-Decylene (27)	$C_{10}H_{20}$	0.746	1,235	4,051.8	4.0		
Diacetyl	$C_4H_6O_2$	0.99	1,236	4,055.1	4.6		

Table 2: Sound Speeds in Fluids (cont.)

Substance	Chemical Formula	*All data given at 25°C (77°F) unless otherwise noted.*					
		Specific Gravity	Sound Speed		Δv/°C	Kinematic Viscosity x10^{-6}	
			m/s	ft/s	m/s/°C	m^2/s	ft^2/s
Diamylamine	$C_{10}H_{23}N$		1,256	4,120.7	3.9		
1,2 Dibromo-ethane (47)	$C_2H_4Br_2$	2.18	995	3,264.4		0.79 (20°C)	8.5 (68°F)
trans-1,2-Dibromoethene (47)	$C_2H_2Br_2$	2.231	935	3,067.6			
Dibutyl phthalate	$C_8H_{22}O_4$		1,408	4,619.4			
Dichloro-t-butyl alcohol	$C_4H_8Cl_2O$		1,304	4,278.2	3.8		
2,3 Dichlorodioxane	$C_2H_6Cl_2O_2$		1,391	4,563.6	3.7		
Dichlorodifluoromethane (3) (Freon 12)	CCl_2F_2	1.516 (40°C)	774.1	2,539.7	4.24		
1,2 Dichloro ethane (47)	$C_2H_4Cl_2$	1.253	1,193	3,914		0.61	6.563
cis1,2-Dichloro-ethene (3, 47)	$C_2H_2Cl_2$	1.284	1,061	3,481			
trans1,2-Dichloro-ethene (3, 47)	$C_2H_2Cl_2$	1.257	1,010	3,313.6			
Dichloro-fluoromethane (3) (Freon 21)	$CHCl_2F$	1.426 (0°C)	891 (0°C)	2,923.2 (32°F)	3.97		
1-2-Dichlorohexafluoro-cyclobutane (47)	$C_4Cl_2F_6$	1.654	669	2,194.9			
1-3-Dichloro-isobutane	$C_4H_8Cl_2$	1.14	1,220	4,002.6	3.4		
Dichloro methane (3)	CH_2Cl_2	1.327	1,070	3,510.5	3.94	0.31	3.335
1,1-Dichloro-1,2,2,2 tetra fluoroethane	$CClF_2$-$CClF_2$	1.455	665.3 (-10°C)	2,182.7 (14°F)	3.73		
Diethyl ether	$C_4H_{10}O$	0.713	985	3,231.6	4.87	0.311	3.346
Diethylene glycol	$C_4H_{10}O_3$	1.116	1,586	5,203.4	2.4		
Diethylene glycol, monoethyl ether	$C_6H_{14}O_3$	0.988	1,458	4,783.5			
Diethylenimide oxide	C_4H_9NO	1.00	1,442	4,731	3.8		
1,2-bis(DiFluoramino) butane (43)	$C_4H_8(NF_2)_2$	1.216	1,000	3,280.8			
1,2-bis(DiFluoramino)-2-methylpropane (43)	$C_4H_9(NF_2)_2$	1.213	900	2,952.8			
1,2-bis(DiFluoramino) propane (43)	$C_3H_6(NF_2)_2$	1.265	960	3,149.6			

Table 2: Sound Speeds in Fluids (cont.)

Substance	Chemical Formula	*All data given at 25°C (77°F) unless otherwise noted.*					
		Specific Gravity	Sound Speed		Δv/°C	Kinematic Viscosity x10^{-6}	
			m/s	ft/s	m/s/°C	m^2/s	ft^2/s
2,2-bis(DiFluoramino propane (43)	$C_3H_6(NF_2)_2$	1.254	890	2920			
2,2-Dihydroxydiethyl ether	$C_4H_{10}O_3$	1.116	1,586	5,203.4	2.4		
Dihydroxyethane	$C_2H_6O_2$	1.113	1,658	5,439.6	2.1		
1,3-Dimethyl-benzene (46)	C_8H_{10}	0.868 (15°C)	1,343 (20°C)	4,406.2 (68°F)		0.749 (15°C)	8.059 (59°F)
1,2-Dimethyl-benzene (29, 46)	C_8H_{10}	0.897 (20°C)	1,331.5	4,368.4	4.1	0.903 (20°C)	9.716 (68°F)
1,4-Dimethyl-benzene (46)	C_8H_{10}		1,334 (20°C)	4,376.6 (68°F)		0.662	7.123
2,2-Dimethyl-butane (29, 33)	C_6H_{14}	0.649 (20°C)	1,079	3,540			
Dimethyl ketone	C_3H_6O	0.791	1,174	3,851.7	4.5	0.399	4.293
Dimethyl pentane (47)	C_7H_{16}	0.674	1,063	3,487.5			
Dimethyl phthalate	$C_8H_{10}O_4$	1.2	1,463	4,799.9			
Diiodo-methane	CH_2I_2	3.235	980	3,215.2			
Dioxane	$C_4H_8O_2$	1.033	1,376	4,514.4			
Dodecane (23)	$C_{12}H_{26}$	0.749	1,279	4,196.2	3.85	1.80	19.368
1,2-Ethanediol	$C_2H_6O_2$	1.113	1,658	5,439.6	2.1		
Ethanenitrile	C_2H_3N	0.783	1,290	4,232.3		0.441	4.745
Ethanoic anhydride (22)	$(CH_3CO)_2O$	1.082	1,180	3,871.4		0.769	8.274
Ethanol	C_2H_6O	0.789	1,207	3,960	4.0	1.39	14.956
Ethanol amide	C_2H_7NO	1.018	1,724	5,656.2	3.4		
Ethoxyethane	$C_4H_{10}O$	0.713	985	3,231.6	4.87	0.311	3.346
Ethyl acetate (33)	$C_4H_8O_2$	0.901	1,085	3,559.7	4.4	0.489	5.263
Ethyl alcohol	C_2H_6O	0.789	1,207	3,960	4.0	1.396	15.020
Ethyl benzene (46)	C_8H_{10}	0.867 (20°C)	1,338 (20°C)	4,389.8 (68°F)		0.797 (17°C)	8.575 (63°F)
Ethyl Bromide (46)	C_2H_5Br	1.461 (20°C)	900 (20°C)	2,952.8 (68°F)		0.275 (20°C)	2.959 (68°F)
Ethyliodide (46)	C_2H_5I	1.950 (20°C)	876 (20°C)	2874 (68°F)		0.29	3.12

Table 2: Sound Speeds in Fluids (cont.)

Substance	Chemical Formula	*All data given at 25°C (77°F) unless otherwise noted.*					
		Specific Gravity	Sound Speed		Δv/°C	Kinematic Viscosity x10^{-6}	
			m/s	ft/s	m/s/°C	m^2/s	ft^2/s
Ether	$C_4H_{10}O$	0.713	985	3231.6	4.87	0.311	3.346
Ethyl ether	$C_4H_{10}O$	0.713	985	3231.6	4.87	0.311	3.346
Ethylene bromide (47)	$C_2H_4Br_2$	2.18	995	3264.4		0.79	8.5
Ethylene chloride (47)	$C_2H_4Cl_2$	1.253	1,193	3914		0.61	6.563
Ethylene glycol	$C_2H_6O_2$	1.113	1,658	5439.6	2.1	17.208 (20°C)	185.158 (68°F)
d-Fenochone	$C_{10}H_{16}O$	0.947	1,320	4330.7		0.22	2.367
d-2-Fenechanone	$C_{10}H_{16}O$	0.947	1,320	4330.7		0.22	2.367
Fluorine	F	0.545 (-143°C)	403 (-143°C)	1322.2 (-225°F)	11.31		
Fluoro-benzene (46)	C_6H_5F	1.024 (20°C)	1,189	3900.9		0.584 (20°C)	6.283 (68°F)
Formaldehyde, methyl ester	$C_2H_4O_2$	0.974	1,127	3697.5	4.02		
Formamide	CH_3NO	1.134 (20°C)	1,622	5321.5	2.2	2.91	31.311
Formic acid, amide	CH_3NO	1.134 (20°C)	1,622	5321.5		2.91	31.311
Freon R12			774.2	2540			
Furfural	$C_5H_4O_2$	1.157	1,444	4737.5	3.7		
Furfuryl alcohol	$C_5H_6O_2$	1.135	1,450	4757.2	3.4		
Fural	$C_5H_4O_2$	1.157	1,444	4737.5	3.7		
2-Furaldehyde	$C_5H_4O_2$	1.157	1,444	4737.5	3.7		
2-Furancarboxaldehyde	$C_5H_4O_2$	1.157	1,444	4737.5	3.7		
2-Furyl-Methanol	$C_5H_6O_2$	1.135	1,450	4757.2	3.4		
Gallium	Ga	6.095	2,870 (30°C)	9416 (86°F)			
Glycerin	$C_3H_8O_3$	1.26	1,904	6246.7	2.2	757.1	8,081.836
Glycerol	$C_3H_8O_3$	1.26	1,904	6246.7	2.2	757.1	8,081.836
Glycol	$C_2H_6O_2$	1.113	1658	5439.6	2.1		
50% Glycol / 50% H_2O			1,578	5,177			

Table 2: Sound Speeds in Fluids (cont.)

Substance	Chemical Formula	*All data given at 25°C (77°F) unless otherwise noted.*					
		Specific Gravity	Sound Speed		Δv/°C	Kinematic Viscosity x10^{-6}	
			m/s	ft/s	m/s/°C	m^2/s	ft^2/s
Helium (45)	He_4	0.125 (-269°C)	183 (-269°C)	600.4 (-452°F)		0.025	.269
Heptane (22, 23)	C_7H_{16}	0.684 (20°C)	1,131	3,710.6	4.25	0.598 (20°C)	6.434 (68°F)
n-Heptane (29, 33)	C_7H_{16}	0.684 (20°C)	1,180	3,871.3	4.0		
Hexachloro-Cyclopentadiene (47)	C_5Cl_6	1.7180	1,150	3,773			
Hexadecane (23)	$C_{16}H_{34}$	0.773 (20°C)	1,338	4,389.8	3.71	4.32 (20°C)	46.483 (68°F)
Hexalin	$C_6H_{12}O$	0.962	1,454	4,770.3	3.6	70.69 (17°C)	760.882 (63°F)
Hexane (16, 22, 23)	C_6H_{14}	0.659	1,112	3,648.3	2.71	0.446	4.798
n-Hexane (29, 33)	C_6H_{14}	0.649 (20°C)	1,079	3,540	4.53		
2,5-Hexanedione	$C_6H_{10}O_2$	0.729	1,399	4,589.9	3.6		
n-Hexanol	$C_6H_{14}O$	0.819	1,300	4,265.1	3.8		
Hexahydrobenzene (15)	C_6H_{12}	0.779	1,248	4,094.5	5.41	1.31 (17°C)	14.095 (63°F)
Hexahydrophenol	$C_6H_{12}O$	0.962	1,454	4,770.3	3.6		
Hexamethylene (15)	C_6H_{12}	0.779	1,248	4,094.5	5.41	1.31 (17°C)	14.095 (63°F)
Hydrogen (45)	H_2	0.071 (-256°C)	1,187 (-256°C)	3,894.4 (-429°F)		0.003 (-256°C)	0.032 (-429°F)
2-Hydroxy-toluene (46)	C_7H_8O	1.047 (20°C)	1,541 (20°C)	5,055.8 (68°F)		4.29 (40°C)	46.16 (104°F)
3-Hydroxy-toluene (46)	C_7H_8O	1.034 (20°C)	1,500 (20°C)	4,921.3 (68°F)		5.979 (40°C)	64.334 (104°F)
Iodo-benzene (46)	C_6H_5I	1.823	1,114 (20°C)	3,654.9 (68°F)		0.954	
Iodo-ethane (46)	C_2H_5I	1.950 (20°C)	876 (20°C)	2,874 (68°F)		0.29	3.12
Iodo-methane	CH_3I	2.28 (20°C)	978	3,208.7		0.211	2.27
Isobutyl acetate (22)	$C_6H_{12}O$		1,180 (27°C)	3,871.4 (81°F)	4.85		

Table 2: Sound Speeds in Fluids (cont.)

Substance	Chemical Formula	*All data given at 25°C (77°F) unless otherwise noted.*					
		Specific Gravity	Sound Speed		Δv/°C	Kinematic Viscosity x10^{-6}	
			m/s	ft/s	m/s/°C	m^2/s	ft^2/s
Isobutanol	$C_4H_{10}O$	0.81 (20°C)	1,212	3,976.4			
Iso-Butane			1,219.8	4002			
Isopentane (36)	C_5H_{12}	0.62 (20°C)	980	3,215.2	4.8	0.34	3.658
Isopropanol (46)	C_3H_8O	0.785 (20°C)	1,170 (20°C)	3,838.6 (68°F)		2.718	29.245
Isopropyl alcohol (46)	C_3H_8O	0.785 (20°C)	1,170 (20°C)	3,838.6 (68°F)		2.718	29.245
Kerosene		0.81	1,324	4,343.8	3.6		
Ketohexamethylene	$C_6H_{10}O$	0.948	1,423	4,668.6	4.0		
Lithium fluoride (42)	LiF		2,485 (900°C)	8,152.9 (1652°F)	1.29		
Mercury (45)	Hg	13.594	1,449 (24°C)	4,753.9 (75°F)		0.114	1.226
Mesityloxide	$C_6H_{16}O$	0.85	1,310	4,297.9			
Methane (25, 28, 38, 39)	CH_4	0.162 (-89°C)	405 (-89°C)	1,328.7 (-128°F)	17.5		
Methanol (40, 41)	CH_4O	0.791 (20°C)	1,076	3,530.2	2.92	0.695	7.478
Methyl acetate	$C_3H_6O_2$	0.934	1,211	3,973.1		0.407	4.379
o-Methylaniline (46)	C_7H_9N	0.999 (20°C)	1,618	5,308.4		4.394 (20°C)	47.279 (68°F)
4-Methylaniline (46)	C_7H_9N	0.966 (45°C)	1,480	4,855.6		1.863 (50°C)	20.095 (122°F)
Methyl alcohol (40, 44)	CH_4O	0.791 (20°C)	1,076	3,530.2	2.92	0.695	7.478
Methyl benzene (16, 52)	C_7H_8	0.867	1,328 (20°C)	4,357 (68°F)	4.27	0.644	7.144
2-Methyl-butane (36)	C_5H_{12}	0.62 (20°C)	980	3,215.2		0.34	3.658
Methyl carbinol	C_2H_6O	0.789	1,207	3,960	4.0	1.396	
Methyl-chloroform (47)	$C_2H_3Cl_3$	1.33	985	3,231.6		0.902 (20°C)	9.705 (68°F)
Methyl-cyanide	C_2H_3N	0.783	1,290	4,232.3		0.441	4.745

Table 2: Sound Speeds in Fluids (cont.)

Substance	Chemical Formula	*All data given at 25°C (77°F) unless otherwise noted.*					
		Specific Gravity	Sound Speed		Δv/°C	Kinematic Viscosity x10^{-6}	
			m/s	ft/s	m/s/°C	m^2/s	ft^2/s
3-Methyl cyclohexanol	$C_7H_{14}O$	0.92	1,400	4,593.2			
Methylene chloride (3)	CH_2Cl_2	1.327	1,070	3,510.5	3.94	0.31	3.335
Methylene iodide	CH_2I_2	3.235	980	3,215.2			
Methyl formate (22)	$C_2H_4O_2$	0.974 (20°C)	1,127	3,697.5	4.02		
Methyl iodide	CH_3I	2.28 (20°C)	978	3,208.7		0.211	2.27
a-Methyl naphthalene	$C_{11}H_{10}$	1.090	1,510	4,954.1	3.7		
2-Methylphenol (46)	C_7H_8O	1.047 (20°C)	1,541 (20°C)	5,055.8 (68°F)		4.29 (40°C)	46.16 (104°F)
3-Methylphenol (46)	C_7H_8O	1.034 (20°C)	1,500 (20°C)	4,921.3 (68°F)		5.979 (40°C)	64.334 (104°F)
Milk, homogenized			1,548	5,080			
Morpholine	C_4H_9NO	1.00	1,442	4,731	3.8		
Naphtha		0.76	1,225	4,019			
Natural Gas (37)		0.316 (-103°C)	753 (-103°C)	2,470.5 (-153°F)			
Neon (45)	Ne	1.207 (-246°C)	595 (-246°C)	1,952.1 (-411°F)			
Nitrobenzene (46)	$C_6H_5NO_2$	1.204 (20°C)	1,415 (20°C)	4,642.4 (68°F)		1.514	16.29
Nitrogen (45)	N_2	0.808 (-199°C)	962 (-199°C)	3,156.2 (-326°F)		0.217 (-199°C)	2.334 (-326°F)
Nitromethane (43)	CH_3NO_2	1.135	1,300	4,265.1	4.0	0.549	5.907
Nonane (23)	C_9H_2O	0.718 (20°C)	1,207	3,960	4.04	0.99 (20°C)	10.652 (68°F)
1-Nonene (27)	C_9H_{18}	0.736 (20°C)	1,207	3,960	4.0		
Octane (23)	C_8H_{18}	0.703	1,172	3,845.1	4.14	0.73	7.857
n-Octane (29)	C_8H_{18}	0.704 (20°C)	1,212.5	3,978	3.50	0.737	.930)
1-Octene (27)	C_8H_{16}	0.723 (20°C)	1,175.5	3,856.6	4.10		
Oil of Camphor Sassafrassy			1,390	4,560.4	3.8		

Table 2: Sound Speeds in Fluids (cont.)

Substance	Chemical Formula	*All data given at 25°C (77°F) unless otherwise noted.*					
		Specific Gravity	Sound Speed		Δv/°C	Kinematic Viscosity x10^{-6}	
			m/s	ft/s	m/s/°C	m^2/s	ft^2/s
Oil, Car (SAE 20a.30)		1.74	870	2,854.3		190	2,045.093
Oil, Castor	$C_{11}H_{10}O_{10}$	0.969	1,477	4,845.8	3.6	0.670	7.209
Oil, Diesel		0.80	1,250	4,101			
Oil, Fuel AA gravity		0.99	1,485	4,872	3.7		
Oil (Lubricating X200)			1,530	5,019.9			
Oil (Olive)		0.912	1,431	4,694.9	2.75	100	1,076.365
Oil (Peanut)		0.936	1,458	4,783.5			
Oil (Sperm)		0.88	1,440	4,724.4			
Oil, 6			1,509 (22°C)	4,951 (72°F)			
2,2-Oxydiethanol	$C_4H_{10}O_3$	1.116	1,586	5,203.4	2.4		
Oxygen (45)	O_2	1.155 (-186°C)	952 (-186°C)	3,123.4 (-303°F)		0.173	1.861
Pentachloro-ethane (47)	C_2HCl_5	1.687	1,082	3,549.9			
Pentalin (47)	C_2HCl_5	1.687	1,082	3,549.9			
Pentane (36)	C_5H_{12}	0.626 (20°C)	1,020	3,346.5		0.363	3.905
n-Pentane (47)	C_5H_{12}	0.557	1,006	3,300.5		0.41	4.413
Perchlorocyclopentadiene (47)	C_5Cl_6	1.718	1,150	3,773			
Perchloro-ethylene (47)	C_2Cl_4	1.632	1,036	3,399			
Perfluoro-1-Hepten (47)	C_7F_{14}	1.67	583	1,912.7			
Perfluoro-n-Hexane (47)	C_6F_{14}	1.672	508	1,666.7			
Phene (29, 40, 41)	C_6H_6	0.879	1,306	4,284.8	4.65	0.711	7.65
b-Phenyl acrolein	C_9H_8O	1.112	1,554	5,098.4	3.2		
Phenylamine (41)	$C_6H_5NO_2$	1.022	1,639	5,377.3	4.0	3.63	39.058
Phenyl bromide (46)	C_6H_5Br	1.522	1,170 (20°C)	3,838.6 (68°F)		0.693	7.456
Phenyl chloride	C_6H_5Cl	1.106	1,273	4,176.5	3.6	0.722	7.768
Phenyl iodide (46)	C_6H_5I	1.823	1,114 (20°C)	3,654.9 (68°F)		0.954 (15°C)	10.265 (59°F)

Table 2: Sound Speeds in Fluids (cont.)

Substance	Chemical Formula	*All data given at 25°C (77°F) unless otherwise noted.*					
		Specific Gravity	Sound Speed		Δv/°C	Kinematic Viscosity x10^{-6}	
			m/s	ft/s	m/s/°C	m^2/s	ft^2/s
Phenyl methane (16, 52)	C_7H_8	0.867 (20°C)	1,328 (20°C)	4,357 (68°F)	4.27	0.644	6.929
3-Phenyl propenal	C_9H_8O	1.112	1,554	5,098.4	3.2		
Phthalardione	$C_8H_4O_3$		1,125 (152°C)	3,691 (306°F)			
Phthalic acid, anhydride	$C_8H_4O_3$		1,125 (152°C)	3,691 (306°F)			
Pthalic anhydride	$C_8H_4O_3$		1,125 (152°C)	3,691 (306°F)			
Pimelic ketone	$C_6H_{10}O$	0.948	1,423	4,668.6	4.0		
Plexiglas, Lucite, Acrylic			2,651	8,698			
Polyterpene Resin		0.77	1,099.8 (190°C)	3,608.4 (374°F)		39,000	419,500
Potassium bromide (42)	KBr		1,169 (900°C)	3,835.3 (1652°F)	0.71	.715cp (900°C)	7.693 (1652°F)
Potassium fluoride (42)	KF		1,792 (900°C)	5,879.3 (1652°F)	1.03		
Potassium iodide (42)	KI		985 (900°C)	3,231.6 (1652°F)	0.64		
Potassium nitrate (48)	KNO_3	1.859 (352°C)	1,740.1 (352°C)	5,709 (666°F)	1.1	1.19 (327°C)	12.804 (621°F)
Propane (2, 13) (-45° to -130°C)	C_3H_8	0.585 (-45°C)	1,003 (-45°C)	3,290.6 (-49°F)	5.7		
1,2,3-Propanetriol	$C_3H_8O_3$	1.26	1,904	6,246.7	2.2	.000757	
1-Propanol (46)	C_3H_8O	0.78 (20°C)	1,222 (20°C)	4,009.2 (68°F)			
2-Propanol (46)	C_3H_8O	0.785 (20°C)	1,170 (20°C)	3,838.6 (68°F)		2.718	29.245
2-Propanone	C_3H_6O	0.791	1,174	3,851.7	4.5	0.399	4.293
Propene (17, 18, 35)	C_3H_6	0.563 (-13°C)	963 (-13°C)	3,159.4 (9°F)	6.32		
n-Propyl acetate (22)	$C_5H_{10}O_2$		1,280 (2°C)	4,199 (36°F)	4.63		
n-Propyl-alcohol	C_3H_8O	0.78 (20°C)	1,222 (20°C)	4,009.2 (68°F)		2.549	27.427
Propylchloride (47)	C_3H_7Cl	0.892	1,058	3,471.1		0.378	4.067

Table 2: Sound Speeds in Fluids (cont.)

Substance	Chemical Formula	*All data given at 25°C (77°F) unless otherwise noted.*					
		Specific Gravity	Sound Speed		Δv/°C	Kinematic Viscosity x10^{-6}	
			m/s	ft/s	m/s/°C	m^2/s	ft^2/s
Propylene (17, 18, 35)	C_3H_6	0.563 (-13°C)	963 (-13°C)	(3159.4) (9°F)	6.32		
Pyridine	C_6H_5N	0.982	1,415	4,642.4	4.1	0.992 (20°C)	10.673 (68°F)
Refrigerant 11 (3, 4)	CCl_3F	1.49	828.3 (0°C)	2,717.5 (32°F)	3.56		
Refrigerant 12 (3)	CCl_2F_2	1.516 (-40°C)	774.1 (-40°C)	2,539.7 (-40°F)	4.24		
Refrigerant 14 (14)	CF_4	1.75 (-150°C)	875.24 (-150°C)	2,871.5 (-238°F)	6.61		
Refrigerant 21 (3)	$CHCl_2F$	1.426 (0°C)	891 (0°C)	2,923.2 (32°F)	3.97		
Refrigerant 22 (3)	$CHClF_2$	1.491 (-69°C)	893.9 (50°C)	2,932.7 (122°F)	4.79		
Refrigerant 113 (3)	$CCl_2F\text{-}CClF_2$	1.563	783.7 (0°C)	2,571.2 (32°F)	3.44		
Refrigerant 114 (3)	$CClF_2\text{-}CClF_2$	1.455	665.3 (-10°C)	2,182.7 (14°F)	3.73		
Refrigerant 115 (3)	C_2ClF_5		656.4 (-50°C)	2,153.5 (-58°F)	4.42		
Refrigerant C318 (3)	C_4F_8	1.62 (-20°C)	574 (-10°C)	1,883.2 (14°F)	3.88		
Selenium (8)	Se		1,072 (250°C)	3,517.1 (482°F)	0.68		
Silicone (30 cp)		0.993	990	3,248		30	322.8
Sodium fluoride (42)	NaF	0.877	2,082 (1000°C)	6,830.7 (1832°F)	1.32		
Sodium nitrate (48)	$NaNO_3$	1.884 (336°C)	1,763.3 (336°C)	5,785.1 (637°F)	0.74	1.37 (336°C)	14.74 (637°F)
Sodium nitrite (48)	$NaNO_2$	1.805 (292°C)	1,876.8 (292°C)	6,157.5 (558°F)			
Solvesso #3		0.877	1,370	4,494.8	3.7		
Spirit of wine	C_2H_6O	0.789	1,207	3,960	4.0	1.396	15.02
Sulfur (7, 8, 10)	S		1,177 (250°C)	3,861.5 (482°F)	-1.13		
Sulfuric Acid (1)	H_2SO_4	1.841	1,257.6	4,126	1.43	11.16	120.081

Table 2: Sound Speeds in Fluids (cont.)

Substance	Chemical Formula	*All data given at 25°C (77°F) unless otherwise noted.*					
		Specific Gravity	Sound Speed		Δv/°C	Kinematic Viscosity x10^{-6}	
			m/s	ft/s	m/s/°C	m^2/s	ft^2/s
Tellurium (7)	Te		991 (450°C)	3,251.3 (842°F)	0.73		
1,1,2,2-Tetrabromo-ethane (47)	$C_2H_2Br_4$	2.966	1,027	3,369.4			
1,1,2,2-Tetrachloro-ethane (67)	$C_2H_2Cl_4$	1.595	1,147	3,763.1		1.156 (15°C)	12.438 (59°F)
Tetrachloroethane (46)	$C_2H_2Cl_4$	1.553 (20°C)	1,170 (20°C)	3,838.6 (68°F)		1.19	12.804
Tetrachloro-ethene (47)	C_2Cl_4	1.632	1,036	3,399			
Tetrachloro-Methane (33, 47)	CCl_4	1.595 (20°C)	926	3,038.1		0.607	6.531
Tetradecane (46)	$C_{14}H_3O$	0.763 (20°C)	1,331 (20°C)	4,366.8 (68°F)		2.86 (20°C)	30.773 (68°F)
Tetraethylene glycol	$C_8H_{18}O_5$	1.123	1,586	5,203.4	3.0		
Tetrafluoro-methane (14) (Freon 14)	CF_4	1.75 (-150°C)	875.24 (-150°C)	2,871.5 (-238°F)	6.61		
Tetrahydro-1,4-isoxazine	C_4H_9NO	1.000	1,442	4,731	3.8		
Toluene (16, 52)	C_7H_8	0.867 (20°C)	1,328 (20°C)	4,357 (68°F)	4.27	0.644	6.929
o-Toluidine (46)	C_7H_9N	0.999 (20°C)	1,618	5,308.4		4.394 (20°C)	47.279 (68°F)
p-Toluidine (46)	C_7H_9N	0.966 (45°C)	1,480	4,855.6		1.863 (50°C)	20.053 (122°F)
Toluol	C_7H_8	0.866	1,308	4,291.3	4.2	0.58	6.24
Tribromo-methane (46, 47)	$CHBr_3$	2.89 (20°C)	918	3,011.8		0.654	7.037
1,1,1-Trichloro-ethane (47)	$C_2H_3Cl_3$	1.33	985	3,231.6		0.902 (20°C)	9.705 (68°F)
Trichloro-ethene (47)	C_2HCl_3	1.464	1,028	3,372.7			
Trichloro-fluoromethane (3) (Freon 11)	CCl_3F	1.49	828.3 (0°C)	2,717.5 (32°F)	3.56		
Trichloro-methane (47)	$CHCl_3$	1.489	979	3,211.9	3.4	0.55	5.918
1,1,2-Trichloro-1,2,2-Trifluoro-Etham	$CCl_2F\text{-}CClF_2$	1.563	783.7 (0°C)	2,571.2 (32°F)			
Triethyl-amine (33)	$C_6H_{15}N$	0.726	1,123	3,684.4	4.47		

Table 2: Sound Speeds in Fluids (cont.)

Substance	Chemical Formula	*All data given at 25°C (77°F) unless otherwise noted.*					
		Specific Gravity	Sound Speed		Δv/°C	Kinematic Viscosity x10^{-6}	
			m/s	ft/s	m/s/°C	m^2/s	ft^2/s
Triethylene glycol	$C_6H_{14}O_4$	1.123	1,608	5,275.6	3.8		
1,1,1-Trifluoro-2-Chloro-2-Bromo-Ethane	$C_2HClBrF_3$	1.869	693	2,273.6			
1,2,2-Trifluorotrichloro-ethane (Freon 113)	$CCl_2F\text{-}CClF_2$	1.563	783.7 (0°C)	2,571.2 (32°F)	3.44		
d-1,3,3-Trimethylnorcamphor	$C_{10}H_{16}O$	0.947	1,320	4,330.7		0.22	2.367
Trinitrotoluene (43)	$C_7H_5(NO_2)_3$	1.64	1,610 (81°C)	5,282.2 (178°F)			
Turpentine		0.88	1,255	4,117.5		1.4	15.064
Unisis 800		0.87	1,346	4,416			
Water, distilled (49, 50)	H_2O	0.996	1,498	4,914.7	-2.4	1.00	10.76
Water, heavy	D^2O		1,400	4,593			
Water, sea		1.025	1,531	5,023	-2.4	1.00	10.76
Wood Alcohol (40, 41)	CH_4O	0.791 (20°C)	1,076	3,530.2	2.92	0.695	7.478
Xenon (45)	Xe		630 (-109°C)	2,067 (-164°F)			
m-Xylene (46)	C_8H_{10}	0.868 (15°C)	1,343 (20°C)	4,406.2 (68°F)		0.749 (15°C)	8.059 (59°F)
o-Xylene (29, 46)	C_8H_{10}	0.897 (20°C)	1,331.5	4,368.4	4.1	0.903 (20°C)	9.716 (68°F)
p-Xylene (46)	C_8H_{10}		1,334 (20°C)	4,376.6 (68°F)		0.662	7.123
Xylene hexafluoride	$C_8H_4F_6$	1.37	879	2,883.9		0.613	6.595
Zinc (7)	Zn		3,298 (450°C)	10,820.2 (842°F)			

5.3 SOUND SPEEDS IN WATER AT SELECTED TEMPERATURES

Table 3: Sound Speeds in Water at Selected Temperatures

Temperature		Sound Speed in Water		Temperature		Sound Speed in Water	
°C	°F	m/s	ft/s	°C	°F	m/s	ft/s
0	32.0	1,402	4,600				
1	33.8	1,407	4,616	31	87.8	1,511	4,958
2	35.6	1,412	4,633	32	89.6	1,513	4,964
3	37.4	1,417	4,649	33	91.4	1,515	4,971
4	39.2	1,421	4,662	34	93.2	1,517	4,977
5	41.0	1,426	4,679	35	95.0	1,519	4,984
6	42.8	1,430	4,692	36	96.8	1,521	4,990
7	44.6	1,434	4,705	37	98.6	1,523	4,997
8	46.4	1,439	4,721	38	100.4	1,525	5,004
9	48.2	1,443	4,734	39	102.2	1,527	5,010
10	50.0	1,447	4,748	40	104.0	1,528	5,013
11	51.8	1,451	4,761	41	105.8	1,530	5,020
12	53.6	1,455	4,774	42	107.6	1,532	5,026
13	55.4	1,458	4,784	43	109.4	1,534	5,033
14	57.2	1,462	4,797	44	111.2	1,535	5,036
15	59.0	1,465	4,807	45	113.0	1,536	5,040
16	60.8	1,469	4,820	46	114.8	1,538	5,046
17	62.6	1,472	4,830	47	116.6	1,539	5,049
18	64.4	1,476	4,843	48	118.4	1,540	5,053
19	66.2	1,479	4,853	49	120.2	1,541	5,056
20	68.0	1,482	4,862	50	122.0	1,543	5,063
21	69.8	1,485	4,872	51	123.8	1,543	5,063
22	71.6	1,488	4,882	52	125.6	1,544	5,066
23	73.4	1,491	4,892	53	127.4	1,545	5,069
24	75.2	1,493	4,899	54	129.2	1,546	5,072
25	77.0	1,496	4,908	55	131.0	1,547	5,076
26	78.8	1,499	4,918	56	132.8	1,548	5,079
27	80.6	1,501	4,925	57	134.6	1,548	5,079
28	82.4	1,504	4,935	58	136.4	1,549	5,082
29	84.2	1,506	4,941	59	138.2	1,550	5,086
30	86.0	1,509	4,951	60	140.0	1,550	5,086

Table 3: Sound Speeds in Water at Selected Temperatures (cont.)

Temperature		Sound Speed in Water		Temperature		Sound Speed in Water	
°C	°F	m/s	ft/s	°C	°F	m/s	ft/s
61	141.8	1,551	5,089	96	204.8	1,546	5,072
62	143.6	1,552	5,092	97	206.6	1,545	5,069
63	145.4	1,552	5,092	98	208.4	1,544	5,066
64	147.2	1,553	5,095	99	210.2	1,543	5,063
65	149.0	1,553	5,095	100	212.0	1,543	5,063
66	150.8	1,553	5,095	104	220.0	1,538	5,046
67	152.6	1,554	5,099	110	230.0	1,532	5,026
68	154.4	1,554	5,099	116	240.0	1,524	5,000
69	156.2	1,554	5,099	121	250.0	1,526	5,007
70	158.0	1,554	5,099	127	260.0	1,507	4,944
71	159.8	1,554	5,099	132	270.0	1,497	4,912
72	161.6	1,555	5,102	138	280.0	1,487	4,879
73	163.4	1,555	5,102	143	290.0	1,476	4,843
74	165.2	1,555	5,102	149	300.0	1,465	4,807
75	167.0	1,555	5,102	154	310.0	1,453	4,767
76	168.8	1,555	5,102	160	320.0	1,440	4,725
77	170.6	1,554	5,099	166	330.0	1,426	4,679
78	172.4	1,554	5,099	171	340.0	1,412	4,633
79	174.2	1,554	5,099	177	350.0	1,398	4,587
80	176.0	1,554	5,099	182	360.0	1,383	4,538
81	177.8	1,554	5,099	188	370.0	1,368	4,488
82	179.6	1,553	5,095	193	380.0	1,353	4,439
83	181.4	1,553	5,095	199	390.0	1,337	4,387
84	183.2	1,553	5,095	204	400.0	1,320	4,331
85	185.0	1,552	5,092	210	410.0	1,302	4,272
86	186.8	1,552	5,092	216	420.0	1,283	4,210
87	188.6	1,552	5,092	221	430.0	1,264	4,147
88	190.4	1,551	5,089	227	440.0	1,244	4,082
89	192.2	1,551	5,089	232	450.0	1,220	4,003
90	194.0	1,550	5,086	238	460.0	1,200	3,937
91	195.8	1,549	5,082	243	470.0	1,180	3,872
92	197.6	1,549	5,082	249	480.0	1,160	3,806
93	199.4	1,548	5,079	254	490.0	1,140	3,740
94	201.2	1,547	5,076	260	500.0	1,110	3,642
95	203.0	1,547	5,076				

5.4 PIPE SIZE DATA

Table 4: Standard ANSI Data for Carbon Steel and Stainless Steel Pipe

Nominal Pipe Size (in.)	Outside Diameter (in.)	Wall Thickness (in.)	A Carbon Steel Wall Thickness Desig.	B Carbon Steel Schedule Number	C Stainless Steel Schedule Number
1/8	0.405	0.049	-	-	10S
		0.068	STD	40	40S
		0.095	XS	80	80S
1/4	0.540	0.065	-	-	10S
		0.088	STD	40	40S
		0.119	XS	80	80S
3/8	0.675	0.065	-	-	10S
		0.091	STD	40	40S
		0.126	XS	80	80S
1/2	0.840	0.065	-	-	5S
		0.083	-	-	10S
		0.109	STD	40	40S
		0.147	XS	80	80S
		0.187	-	160	-
		0.294	XXS	-	-
3/4	1.050	0.065	-	-	5S
		0.083	-	-	10S
		0.113	STD	40	40S
		0.154	XS	80	80S
		0.218	-	160	-
		0.308	XXS	-	-
1	1.315	0.065	-	-	5S
		0.109	-	-	10S
		0.133	STD	40	40S
		0.179	XS	80	80S
		0.250	-	160	-
		0.358	XXS	-	-
1 1/4	1.660	0.065	-	-	5S
		0.109	-	-	10S
		0.140	STD	40	40S
		0.191	XS	80	80S
		0.250	-	160	-
		0.382	XXS	-	-
1 1/2	1.900	0.065	-	-	5S
		0.109	-	-	10S
		0.145	STD	40	40S
		0.200	XS	80	80S
		0.281	-	160	-
		0.400	XXS	-	-
2	2.375	0.065	-	-	5S
		0.109	-	-	10S
		0.154	STD	40	40S
		0.218	XS	80	80S
		0.344	-	160	-
		0.436	XXS	-	-
2 1/2	2.875	0.083	-	-	5S
		0.120	-	-	10S
		0.203	STD	40	40S
		0.276	XS	80	80S
		0.375	-	160	-
		0.552	XXS	-	-
3	3.500	0.083	-	-	5S
		0.120	-	-	10S
		0.216	STD	40	40S
		0.300	XS	80	80S
		0.438	-	160	-
		0.600	XXS	-	-
3 1/2	4.000	0.083	-	-	5S
		0.120	-	-	10S
		0.226	STD	40	40S
		0.318	XS	80	80S
		0.636	XXS		-
4	4.500	0.083	-	-	5S
		0.120	-	-	10S
		0.237	STD	40	40S
		0.337	XS	80	80S
		0.438	-	120	-
		0.531	-	160	-
		0.674	XXS	-	-
5	5.536	0.109	-	-	5S
		0.134	-	-	10S
		0.258	STD	40	40S
		0.375	XS	80	80S
		0.500	-	120	-
		0.625	-	160	-
		0.750	XXS	-	-

Table 4: Standard ANSI Data for Carbon Steel and Stainless Steel Pipe (cont.)

Nominal Pipe Size (in.)	Outside Diameter (in.)	Wall Thickness (in.)	A Carbon Steel Wall Thickness Desig.	B Carbon Steel Schedule Number	C Stainless Steel Schedule Number
6	6.625	0.109	-	-	5S
		0.134	-	-	10S
		0.280	STD	40	40S
		0.432	XS	80	80S
		0.562	-	120	-
		0.719	-	160	-
		0.864	XXS	-	-
8	8.625	0.109	-	-	5S
		0.148	-	-	10S
		0.250	-	20	-
		0.277	-	30	-
		0.322	STD	40	40S
		0.406	-	60	-
		0.500	XS	80	80S
		0.594	-	100	-
		0.719	-	120	-
		0.812	-	140	-
		0.875	XXS	-	-
		0.906	-	160	-
10	10.750	0.134	-	-	5S
		0.165	-	-	10S
		0.250	-	20	-
		0.307	-	30	-
		0.365	STD	40	40S
		0.500	XS	60	80S
		0.594	-	80	-
		0.719	-	100	-
		0.844	-	120	-
		1.000	XXS	140	-
12	12.750	0.156	-	-	5S
		0.180	-	-	10S
		0.250	-	20	-
		0.330	-	30	-
		0.375	STD	-	40S
		0.406	-	40	-
		0.500	XS	-	80S
		0.562	-	60	-
		0.688	-	80	-
		0.844	-	100	-
		1.000	XXS	120	-
		1.125	-	140	-
		1.312	-	160	-
14	14.000	0.156	-	-	5S
		0.188	-	-	10S
		0.250	-	10	-
		0.312	-	20	-
		0.375	STD	30	-
		0.438	-	40	-
		0.500	XS	-	-
		0.594	-	60	-
		0.625	XXS	-	-
		0.750	-	80	-
		0.938	-	100	-
		1.094	-	120	-
		1.250	-	140	-
		1.406	-	160	-
16	16.000	0.165	-	-	5S
		0.188	-	-	10S
		0.250	-	10	-
		0.312	-	20	-
		0.375	STD	30	-
		0.500	XS	40	-
		0.656	-	60	-
		0.844	-	80	-
		1.031	-	100	-
		1.219	-	120	-
		1.439	-	140	-
		1.594	-	160	-
18	18.000	0.165	-	-	5S
		0.188	-	-	10S
		0.250	-	10	-
		0.312	-	20	-
		0.375	STD	-	-
		0.438	-	30	-
		0.500	XS	-	-
		0.562	-	40	-
		0.750	-	60	-
		0.938	-	80	-
		1.156	-	100	-
		1.375	-	120	-
		1.562	-	140	-
		1.781	-	160	-

Table 4: Standard ANSI Data for Carbon Steel and Stainless Steel Pipe (cont.)

Nominal Pipe Size (in.)	Outside Diameter (in.)	Wall Thickness (in.)	A Carbon Steel Wall Thickness Desig.	B Carbon Steel Schedule Number	C Stainless Steel Schedule Number
20	20.000	0.188	-	-	5S
		0.218	-	-	10S
		0.250	-	10	-
		0.375	STD	20	-
		0.500	XS	30	-
		0.594	-	40	-
		0.812	-	60	-
		1.031	-	80	-
		1.281	-	100	-
		1.500	-	120	-
		1.750	-	140	-
		1.969	-	160	-
22	22.000	0.188	-	-	5S
		0.218	-	-	10S
		0.250	-	10	-
		0.375	STD	20	-
		0.500	XS	30	-
		0.875	-	60	-
		1.125	-	80	-
		1.375	-	100	-
		1.625	-	120	-
		1.875	-	140	-
		2.125	-	160	-
24	24.000	0.218	-	-	5S
		0.250	-	10	10S
		0.375	STD	20	-
		0.500	XS	-	-
		0.562	-	30	-
		0.688	-	40	-
		0.969	-	60	-
		1.219	-	80	-
		1.531	-	100	-
		1.812	-	120	-
		2.062	-	140	-
		2.344	-	160	-
26	26.000	0.312	-	10	-
		0.375	STD	-	-
		0.500	XS	20	-
28	28.000	0.312	-	10	-
		0.375	STD	-	-
		0.500	XS	20	-
		0.625	-	30	-
30	30.000	0.250	-	-	5S
		0.312	-	10	10S
		0.375	STD	-	-
		0.500	XS	20	-
		0.625	-	30	-
		0.750	-	40	-
32	32.000	0.312	-	10	-
		0.375	STD	-	-
		0.500	XS	20	-
		0.625	-	30	-
		0.688	-	40	-
34	34.000	0.344	-	10	-
		0.375	STD	-	-
		0.500	XS	20	-
		0.625	-	30	-
		0.688	-	40	-
36	36.000	0.312	-	10	-
		0.375	STD	-	-
		0.500	XS	20	-
		0.625	-	30	-
		0.750	-	40	-
42	42.000	0.375	STD	-	-
		0.500	XS	20	-
		0.625	-	30	-
		0.750	-	40	-
48	48.000	0.375	STD	-	-
		0.500	XS	-	-

Table 5: Cast Iron Pipe Data - Standard Classes

Nominal Pipe Size (in.)	Class A		Class B		Class C		Class D	
	Outside Diameter (in.)	Wall Thickness (in.)	Outside Diameter (in.)	Wall Thickness (in.)	Outside Diameter (in.)	Wall Thickness (in.)	Outside Diameter (in.)	Wall Thickness (in.)
3	3.80	0.39	3.96	0.42	3.96	0.45	3.96	0.48
4	4.80	0.42	5.00	0.45	5.00	0.40	5.00	0.52
6	6.90	0.44	7.10	0.48	7.10	0.51	7.10	0.55
8	9.05	0.46	9.05	0.51	9.30	0.56	9.30	0.60
10	11.10	0.50	11.10	0.57	11.40	0.62	11.40	0.68
12	13.20	0.54	13.20	0.62	13.50	0.68	13.50	0.75
14	15.30	0.57	15.30	0.66	15.65	0.74	15.65	0.82
16	7.40	0.60	17.40	0.70	17.80	0.80	17.80	0.89
18	19.50	0.64	19.50	0.75	19.92	0.87	19.92	0.96
20	21.60	0.67	21.60	0.80	22.06	0.92	22.06	1.03
24	25.80	0.76	25.80	0.89	26.32	1.05	26.32	1.16
30	31.74	0.88	32.00	1.03	32.40	1.20	32.74	1.37
32	37.96	0.99	38.30	1.15	38.70	1.36	39.16	1.58
42	44.20	1.10	44.50	1.28	45.10	1.54	45.58	1.78
48	50.50	1.26	50.80	1.42	51.40	1.71	51.98	1.99
54	56.66	1.35	57.10	1.55	57.80	1.90	58.40	2.23
60	62.80	1.39	63.40	1.67	64.20	2.00	64.82	2.38
72	75.34	1.62	76.00	1.95	76.88	2.39		
84	87.54	1.72	88.54	2.22				

Nominal Pipe Size (in.)	Class E		Class F		Class G		Class H	
	Outside Diameter (in.)	Wall Thickness (in.)	Outside Diameter (in.)	Wall Thickness (in.)	Outside Diameter (in.)	Wall Thickness (in.)	Outside Diameter (in.)	Wall Thickness (in.)
3								
4								
6	7.22	0.58	7.22	0.61	7.38	0.65	7.38	0.69
8	9.42	0.66	9.42	0.66	9.60	0.75	9.60	0.80
10	11.60	0.74	11.60	0.80	11.84	0.86	11.84	0.92
12	13.78	0.82	13.78	0.89	14.08	0.97	14.08	1.04
14	15.98	0.90	15.98	0.99	16.32	1.07	16.32	1.16
16	18.16	0.90	18.16	1.08	18.54	1.18	18.54	1.27
18	20.34	1.07	20.34	1.17	20.78	1.28	20.78	1.39
20	22.54	1.15	22.54	1.27	23.02	1.39	23.02	1.51
24	26.90	1.31	26.90	1.45	27.76	1.75	27.76	1.88
30	33.10	1.55	33.46	1.73				
32	39.60	1.80	40.04	2.02				
42								
48								
54								
60								
72								
84								

Table 6: Ductile Iron Pipe Data - Standard Classes

Nominal Pipe Size (in.)	Outside Diameter (in.)	Pipe Wall Thickness (in.)						
		Class 50	Class 51	Class 52	Class 53	Class 54	Class 55	Class 56
3	3.96		0.25	0.28	0.31	0.43	0.37	0.40
4	4.80		0.26	0.29	0.32	0.35	0.38	0.41
6	6.90	0.25	0.28	0.31	0.34	0.37	0.40	0.43
8	9.05	0.27	0.30	0.33	0.36	0.39	0.42	0.45
10	11.10	0.29	0.32	0.35	0.38	0.44	0.47	
12	13.20	0.31	0.34	0.37	0.40	0.43	0.46	0.49
14	15.30	0.33	0.36	0.39	0.42	0.45	0.48	0.51
16	17.40	0.34	0.37	0.40	0.43	0.46	0.49	0.52
18	19.50	0.35	0.38	0.41	0.44	0.47	0.50	0.53
20	21.60	0.36	0.39	0.42	0.45	0.48	0.51	0.54
24	25.80	0.38	0.41	0.44	0.47	0.50	0.53	0.56
30	32.00				0.51	0.55	0.59	0.63
36	38.30				0.58	0.63	0.68	0.73
42	44.50				0.65	0.71	0.77	0.83
48	50.80				0.72	0.79	0.86	0.93
54	57.10				0.81	0.89	0.97	1.05

NOTE: Because of AKTEK's policy of improving their products, the TFM2100-NG, would be revised and improved. Please inform us about misunderstandings or errors which you may find in this manual comparing it to the device you bought. Do not hesitate to contact us to suggest how to improve our devices.

Thank You.

Aktek
Endüstriyel Ekipman ve Enstrümantasyon Ltd.Şti.
Perpa Ticaret Merkezi A-Blok Kat: 11 No: 1582
Okmeydanı – İstanbul
Tel: 0212 621 7200 – Faks: 0212 621 7201
E-mail: info@aktek.com.tr – Web: www.aktek.com.tr